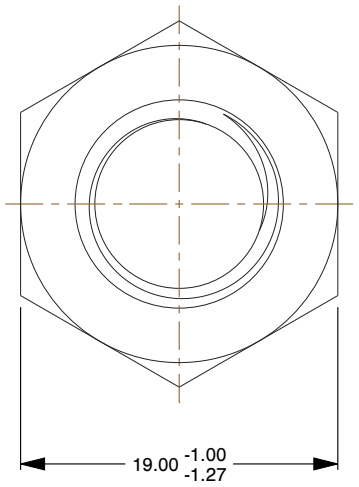

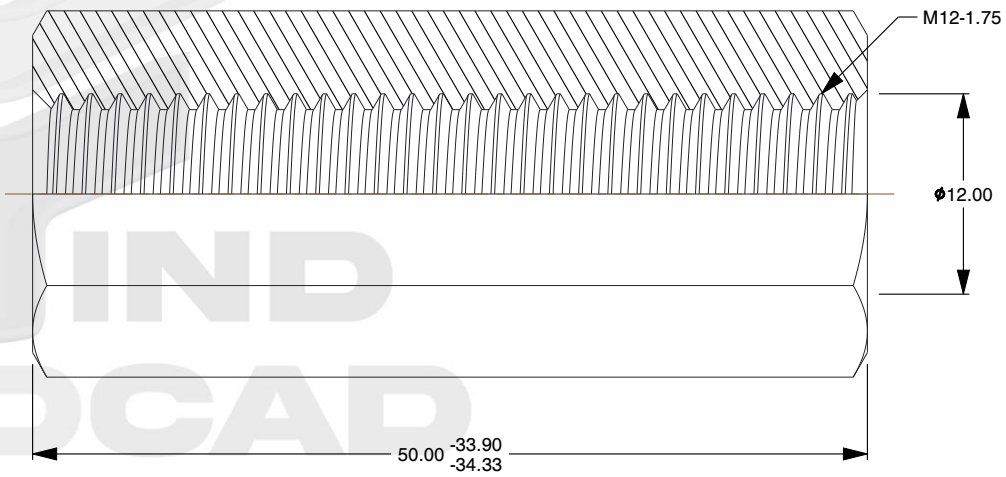

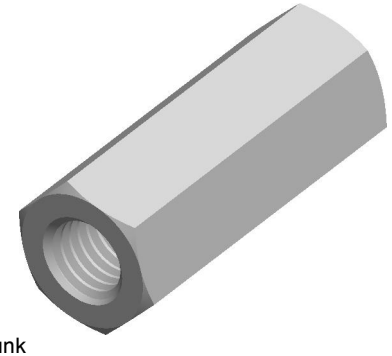

Notes:

1. **Category:** Coupling Nuts
2. **System of Measurement:** Metric
3. **Form and Design:** Double Chamfered and Double Countersunk
4. **Drive Style:** External Hex Drive
5. **Thread Length:** Full Thread
6. **Thread Direction:** Right-Hand Thread
7. **Standards and Specifications:** DIN 88087

find3dcad

THIRD ANGLE PROJECTION

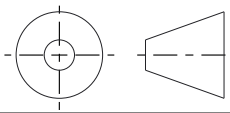

This file and the related information are provided for reference only and may change without notice. find3dcad does not guarantee the accuracy, completeness, or suitability of this file or the information provided. You are responsible for how you use this file and its information.

This document is the property of find3dcad. The information in it may not be copied, shared, or given to any third party without written permission from find3dcad.

DESCRIPTION

M12-1.75 X 50mm DIN 88087, Metric, Hex Coupling Nuts, Steel, Zinc Plated

TITLE

Coupling Nuts

Sheet Size	PART NUMBER	Rev.	ISSUED
A	MDHCN2431-12175X50	01	2026-10-20

SCALE: 2.209

Unless otherwise specified Dimensions are in METRIC