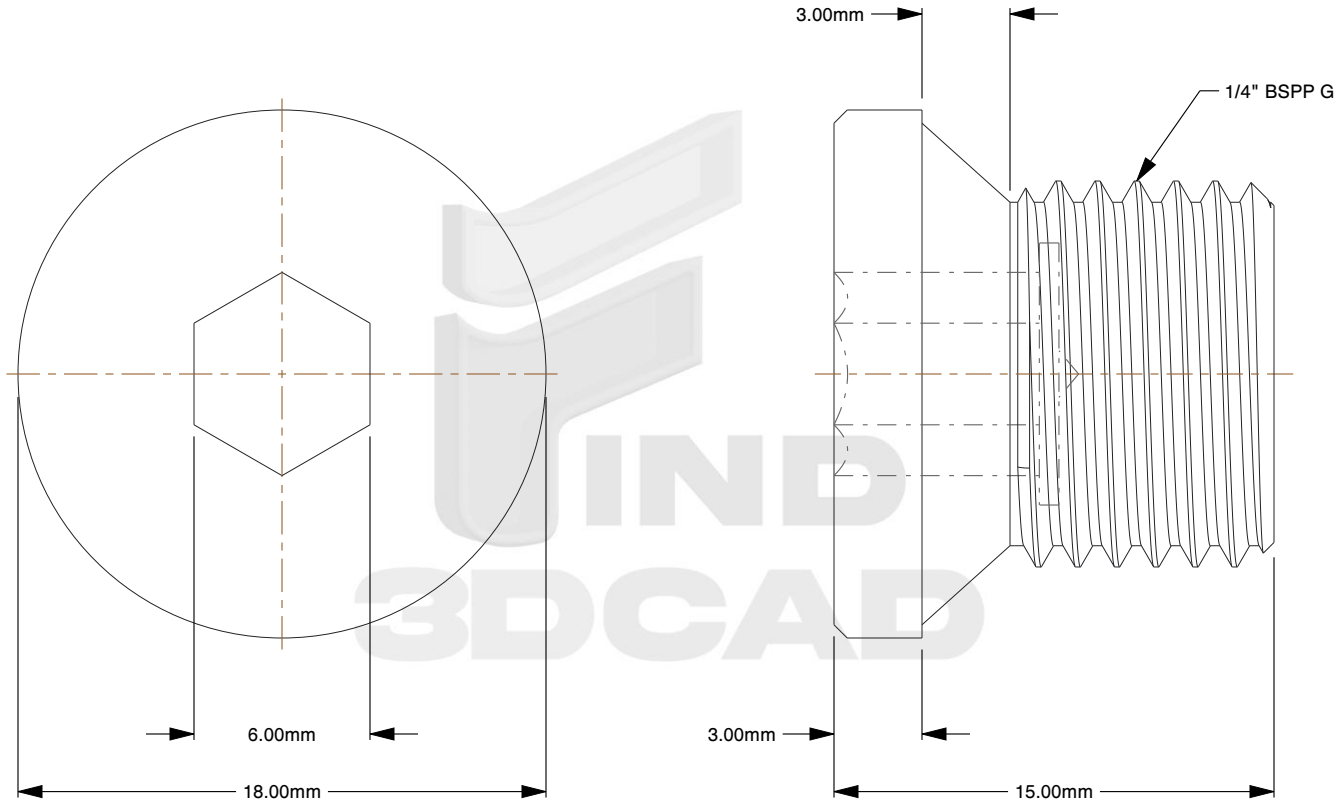

Notes:

1. **Thread Diameter + Pitch:** 1/4" BSPP G
2. **Thread Direction:** Right Hand
3. **Type:** Allen Socket Drain Plug
4. **Material:** A2-50 Stainless Steel
5. **Finish:** Plain
6. **Type DP Thread:** BSPP Parallel
7. **Overall Length:** 15mm
8. **Drive:** 6mm Allen Socket
9. **Head Height:** 3mm
10. **Flange Type:** Smooth
11. **Flange Width:** 18mm
12. **Taper Seat Height:** 3mm
13. **Specification:** DIN 908 BSPP

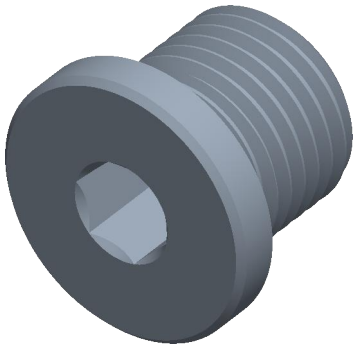

find3dcad

THIRD ANGLE PROJECTION

This file and the related information are provided for reference only and may change without notice. find3dcad does not guarantee the accuracy, completeness, or suitability of this file or the information provided. You are responsible for how you use this file and its information.

This document is the property of find3dcad. The information in it may not be copied, shared, or given to any third party without written permission from find3dcad.

TITLE	DESCRIPTION
Allen Socket Drain Plug	British Flanged Allen Plug Stainless Steel DIN 908 BSPP

Sheet Size	PART NUMBER	Rev.	ISSUED
A	MDASDPB1-4AHSS	01	2026-10-20

SCALE: 3.881	Unless otherwise specified Dimensions are in MILLIMETERS