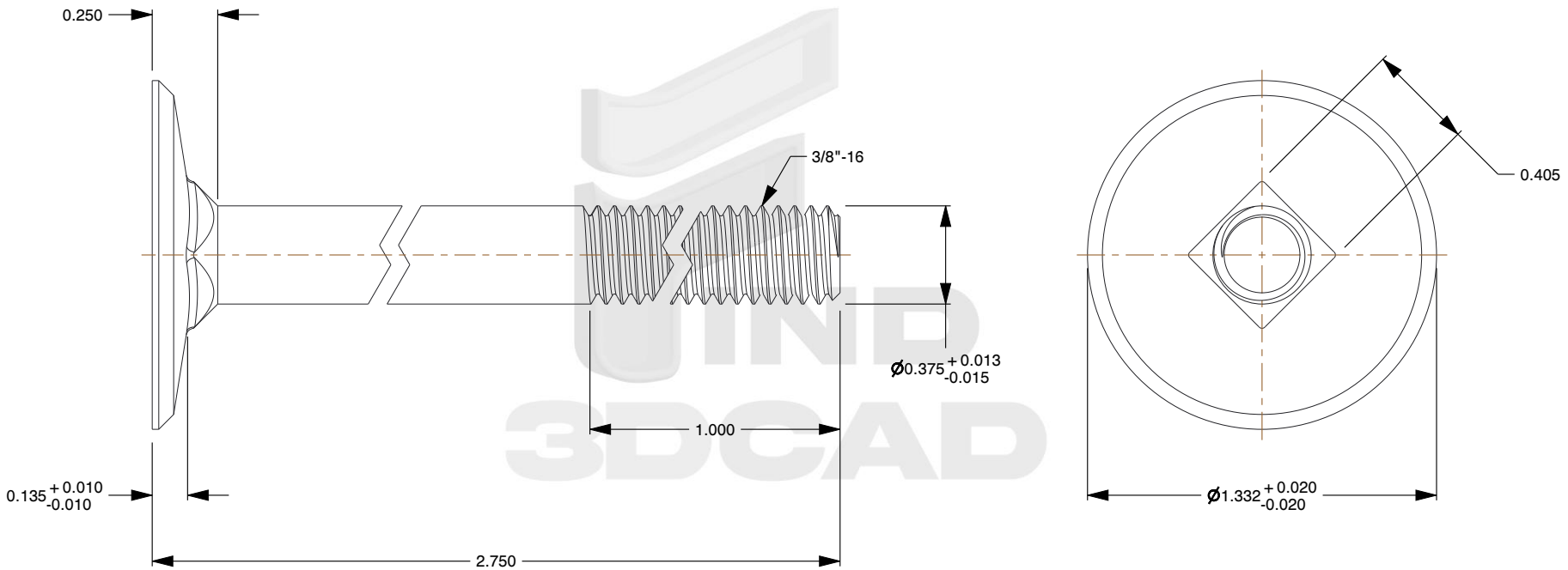

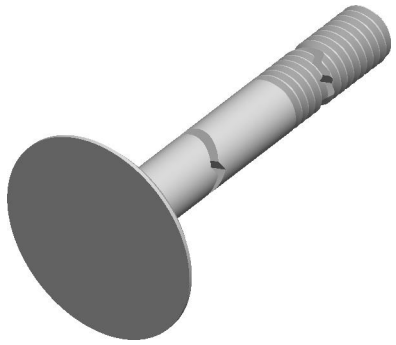

Notes:

1. **Category:** Elevator Bolts
2. **System of Measurement:** Inch
3. **Head Style:** Flat Head
4. **Head Style Detail:** Square Neck
5. **Thread Length:** Standard Thread Length
6. **Thread Direction:** Right-Hand Thread

find3dcad

THIRD ANGLE PROJECTION

This file and the related information are provided for reference only and may change without notice. find3dcad does not guarantee the accuracy, completeness, or suitability of this file or the information provided. You are responsible for how you use this file and its information.

This document is the property of find3dcad. The information in it may not be copied, shared, or given to any third party without written permission from find3dcad.

TITLE	DESCRIPTION
Carriage Bolts	3/8"-16 X 2-3/4" Elevator Bolts, Flat Head, Square Neck, Steel, Zinc Plated

Sheet Size	PART NUMBER	Rev.	ISSUED
A	IAFHSQNB025-3816X234	01	2026-10-13

SCALE: 1.588

Unless otherwise specified Dimensions are in INCHES