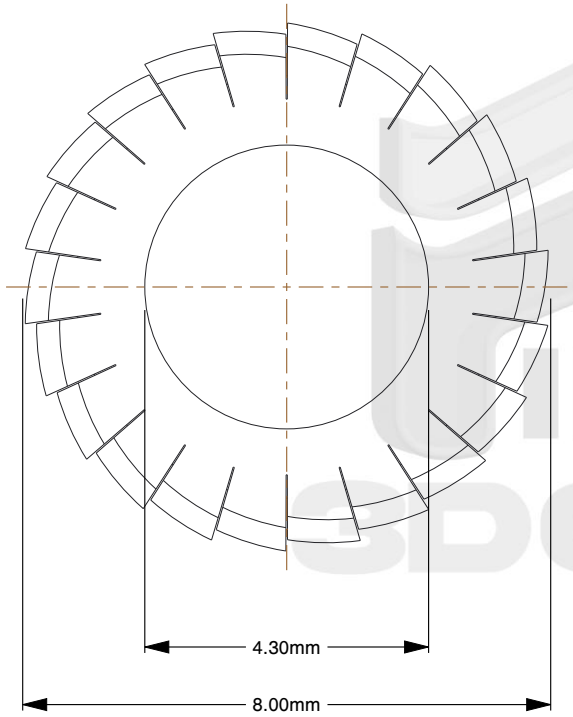

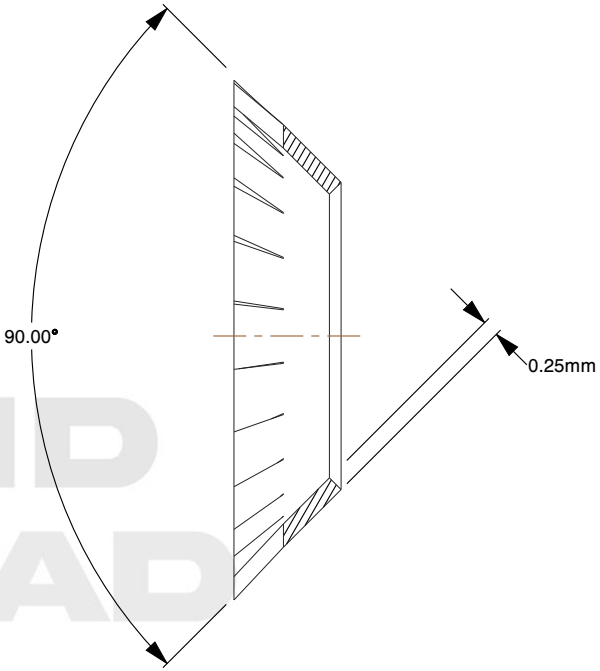

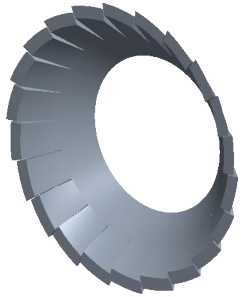

Notes:

1. **For Screw/Bolt Size:** M4
2. **Type:** Star Washer
3. **Form:** Form V
4. **Material:** HV 140 Steel
5. **Finish:** Zinc Plated
6. **Thickness:** 0.25mm
7. **Inner Diameter:** 4.3mm
8. **Outer Diameter:** 8mm
9. **Measurement System:** Metric
10. **Specification:** DIN 6798-V

find3dcad

THIRD ANGLE PROJECTION

This file and the related information are provided for reference only and may change without notice. find3dcad does not guarantee the accuracy, completeness, or suitability of this file or the information provided. You are responsible for how you use this file and its information.

This document is the property of find3dcad. The information in it may not be copied, shared, or given to any third party without written permission from find3dcad.

TITLE	DESCRIPTION
Star Washer	Serrated Cup Lock Washer External DIN 6798-V Steel, Zinc Plated

Sheet Size	PART NUMBER	Rev.	ISSUED
A	MDSLWFV4CLZ	01	2026-10-16

SCALE: 8.731	Unless otherwise specified Dimensions are in MILLIMETERS