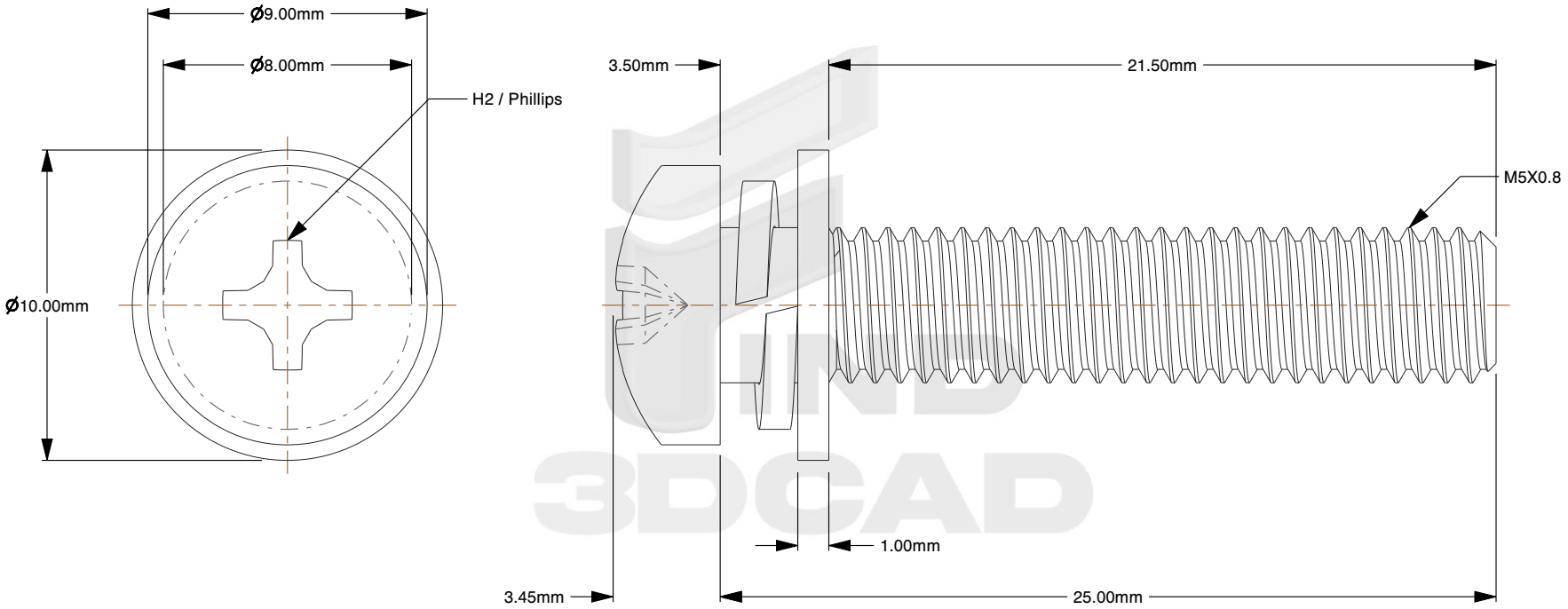

Notes:

1. **Thread Diameter + Pitch:** M5X0.8
2. **Thread Direction:** Right Hand
3. **Type:** SEMS Pan Head Bolt/Screw
4. **Material:** Class 4.8 Steel
5. **Finish:** Yellow Zinc Plated
6. **Drive:** H2 / Phillips
7. **Thread Amount:** Full Thread
8. **Length:** 25mm
9. **Threaded Length:** 21.5mm
10. **Shank Length:** 3.5mm
11. **Flat Washer:** OD: 10mm; Thickness: 1mm
12. **Lock Washer:** OD: 8mm
13. **Head Diameter:** 9mm
14. **Head Height:** 3.45mm
15. **Measurement System:** Metric
16. **Specification:** JIS B1188

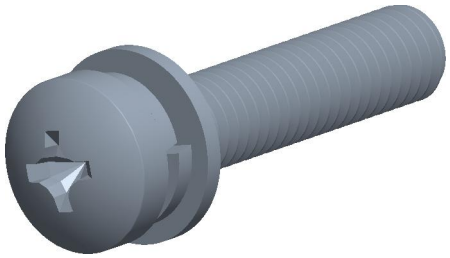

find3dcad	THIRD ANGLE PROJECTION
This file and the related information are provided for reference only and may change without notice. find3dcad does not guarantee the accuracy, completeness, or suitability of this file or the information provided. You are responsible for how you use this file and its information.	This document is the property of find3dcad. The information in it may not be copied, shared, or given to any third party without written permission from find3dcad.
TITLE Pan Head Screw	DESCRIPTION M5X0.8 Pan Phillips SEMS Steel Yellow Zinc Flat + Lock Washer

Sheet Size	PART NUMBER	Rev.	ISSUED
A	MJPPHBS-MSP5X25YLW	01	2026-10-20

SCALE: 4.624	Unless otherwise specified Dimensions are in MILLIMETERS