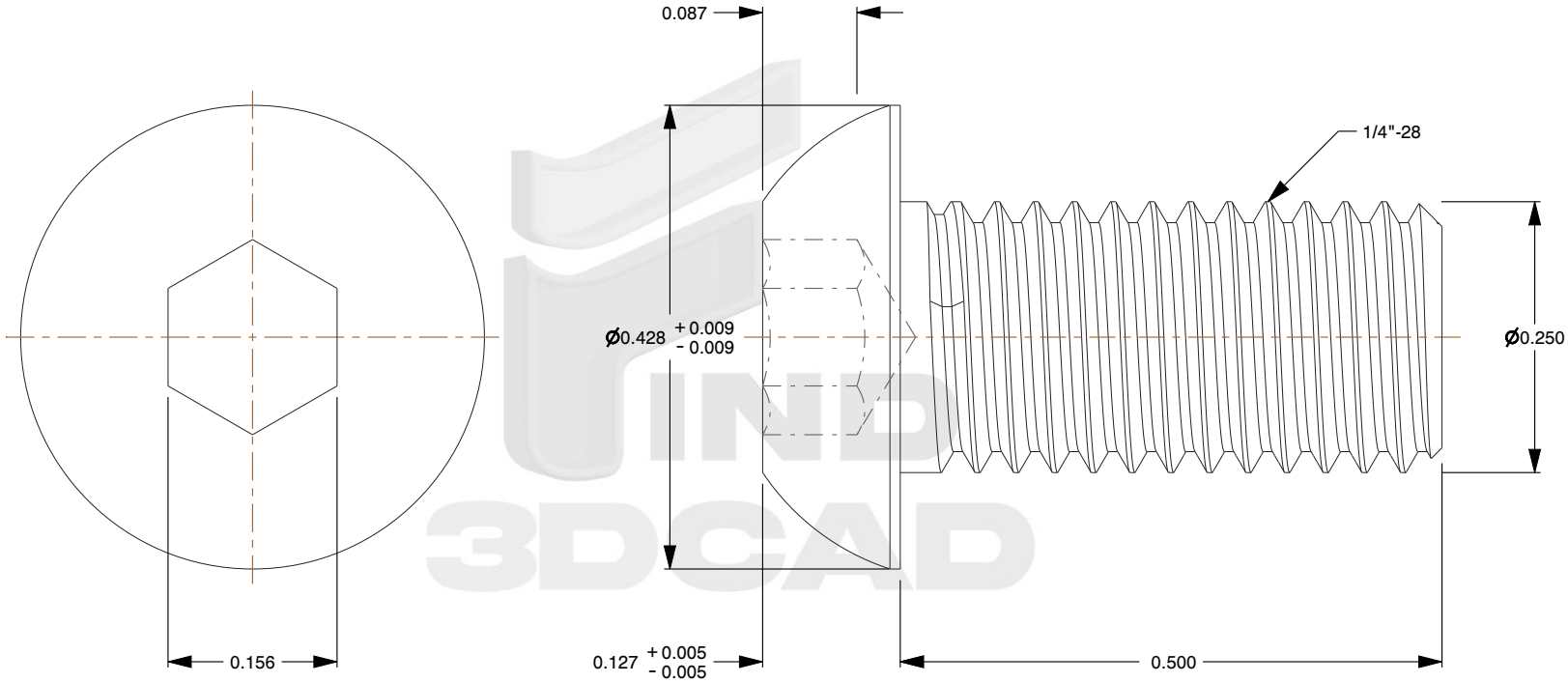

Notes:

1. **Category:** Socket Head Cap Screws
2. **System of Measurement:** Inch
3. **Thread Size:** 1/4-20
4. **Length:** 1/2"
5. **Head Style:** Button Head
6. **Drive Style:** Hex Socket Drive
7. **Thread Length:** Full Thread
8. **Thread Direction:** Right-Hand Thread
9. **Material:** Alloy Steel
10. **Finish:**Plain
11. **Origin:** Origin Undefined
12. **Standards and Specifications:** ASME B18.3

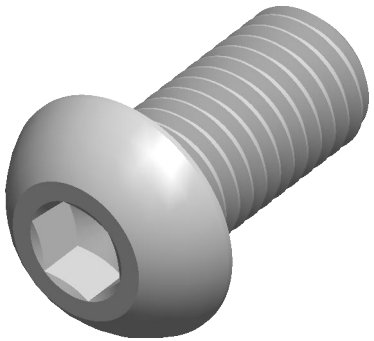

https://find3dcad.com/

THIRD ANGLE PROJECTION

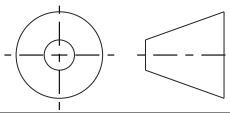

This file and the related information are provided for reference only and may change without notice. FIND 3D CAD does not guarantee the accuracy, completeness, or suitability of this file or the information provided. You are responsible for how you use this file and its information.

This document is the property of FIND 3D CAD. The information in it may not be copied, shared, or given to any third party without written permission from FIND 3D CAD.

DESCRIPTION

1/4-28 X 1/2 BUTTON HEAD SOCKET CAP SCREW

TITLE

Cap Screws

Sheet Size	PART NUMBER	Rev.	ISSUED
A	25F50KBC	01	2026-08-26

SCALE: 5.841

Unless otherwise specified Dimensions are in INCHES