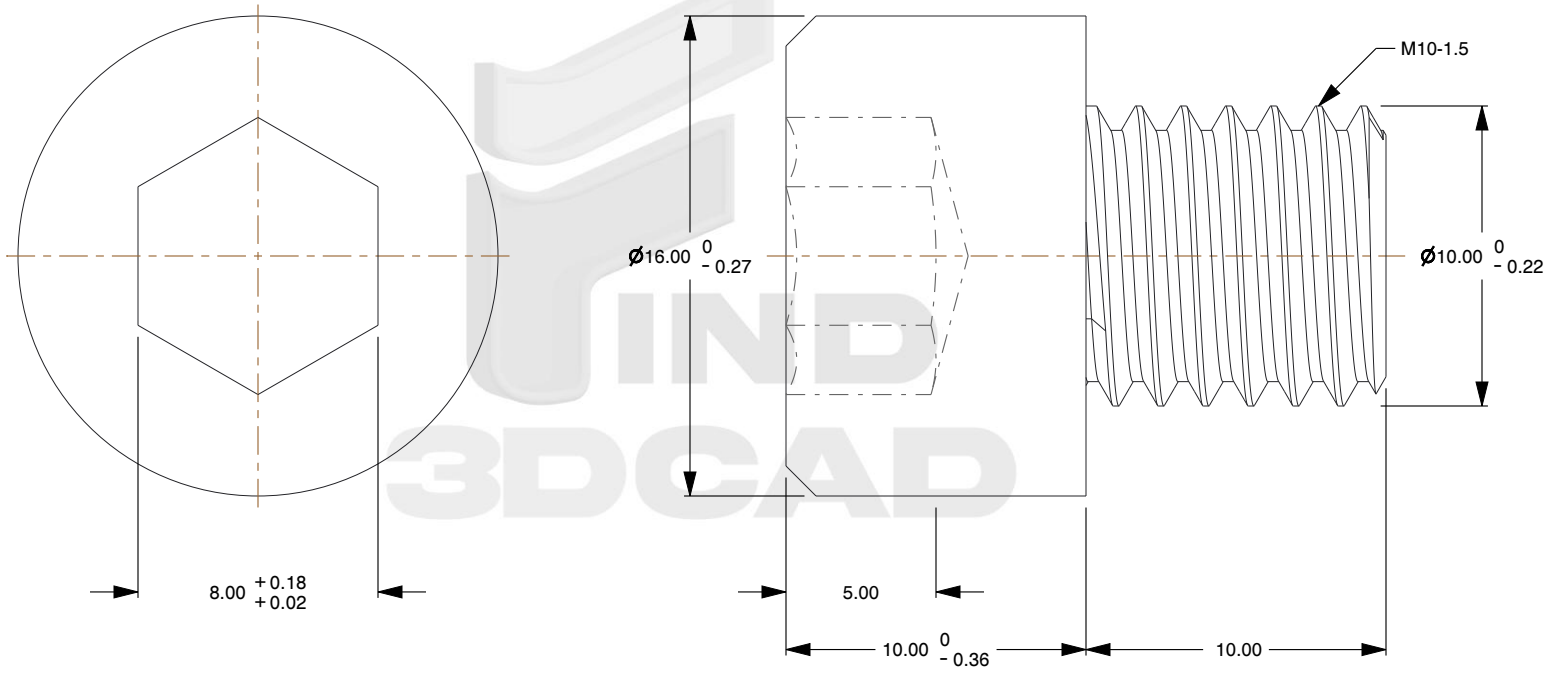

Notes:

1. **Category:** Socket Head Cap Screws
2. **System of Measurement:** Metric
3. **Head Style:** Cylindrical Head
4. **Drive Style:** Hex Socket Drive
5. **Threading:** Thread Class ANSI B1.13M
6. **Thread Direction:** Right-Hand Thread
7. **Material:** Steel
8. **Material Grade:** Class 12.9 Steel
9. **Material Processes:** Heat Treated
10. **Coating:** Oxidized
11. **Coating Color:** Black
12. **Origin:** Made in U.S.A.
13. **Standards and Specifications:** ISO 4762

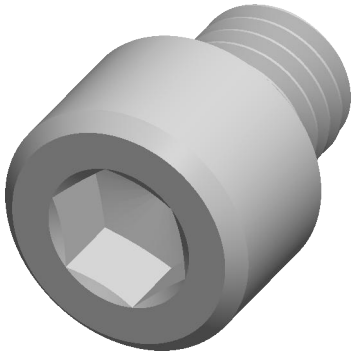

find3dcad

THIRD ANGLE PROJECTION

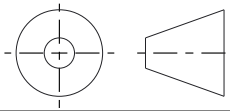

This file and the related information are provided for reference only and may change without notice. find3dcad does not guarantee the accuracy, completeness, or suitability of this file or the information provided. You are responsible for how you use this file and its information.

This document is the property of find3dcad. The information in it may not be copied, shared, or given to any third party without written permission from find3dcad.

DESCRIPTION

M10-1.5 X 10mm ISO 4762, Metric, Hex Socket Head Cap Screws, Class 12.9 Steel, Black Oxide, Holo-Krome

TITLE

Cap Screws

Sheet Size	PART NUMBER	Rev.	ISSUED
A	MICHHSCS003-1015X10X8	01	2026-10-16

SCALE: 3.969

Unless otherwise specified Dimensions are in MILLIMETERS