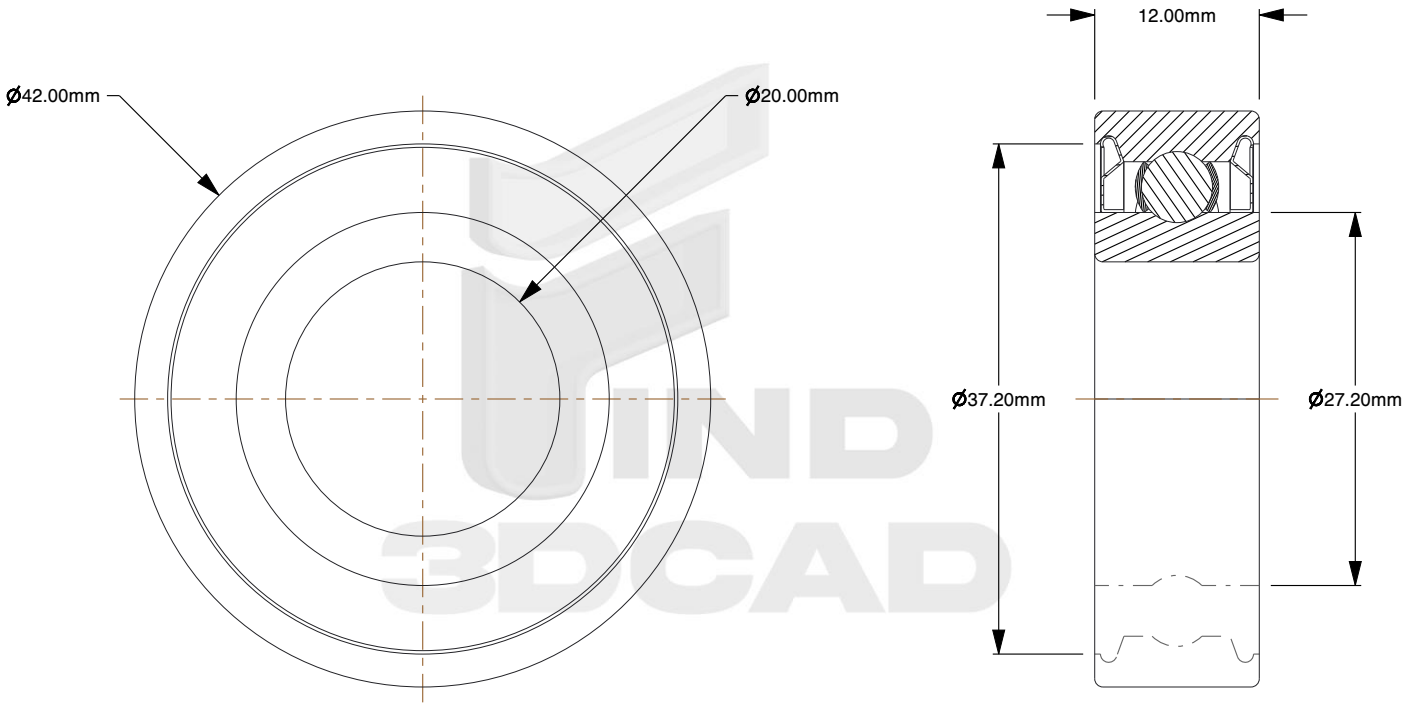

Notes:

1. **Bearing Type:** Deep groove ball bearing
2. **Bore type:** Cylindrical
3. **Sealing:** Shield on Both sides
4. **Sealing type:** Non-contact
5. **Number of rows:** 1
6. **Filling slots:** Without
7. **Bore diameter:** 20mm
8. **Outside diameter:** 42mm
9. **Width:** 12mm
10. **Series:** 2Z

    Z shield on both sides of the bearing

    acrylonitrile-butadiene rubber (NBR) on one side of the bearing

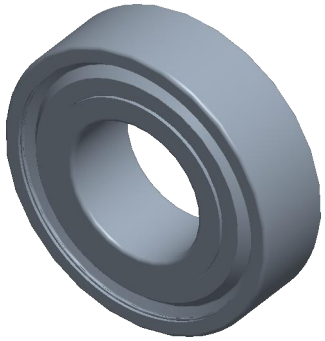

find3dcad.com

THIRD ANGLE PROJECTION

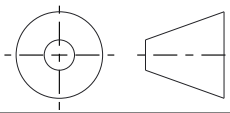

This file and the related information are provided for reference only and may change without notice. FIND 3D CAD does not guarantee the accuracy, completeness, or suitability of this file or the information provided. You are responsible for how you use this file and its information.

This document is the property of FIND 3D CAD. The information in it may not be copied, shared, or given to any third party without written permission from FIND 3D CAD.

DESCRIPTION

Deep groove ball bearing
with shields

TITLE

Deep groove ball bearing

Sheet Size	PART NUMBER	Rev.	ISSUED
A	DGBB-6004-2Z	01	2026-10-22

SCALE: 1.814

Unless otherwise specified Dimensions are in MILLIMETERS