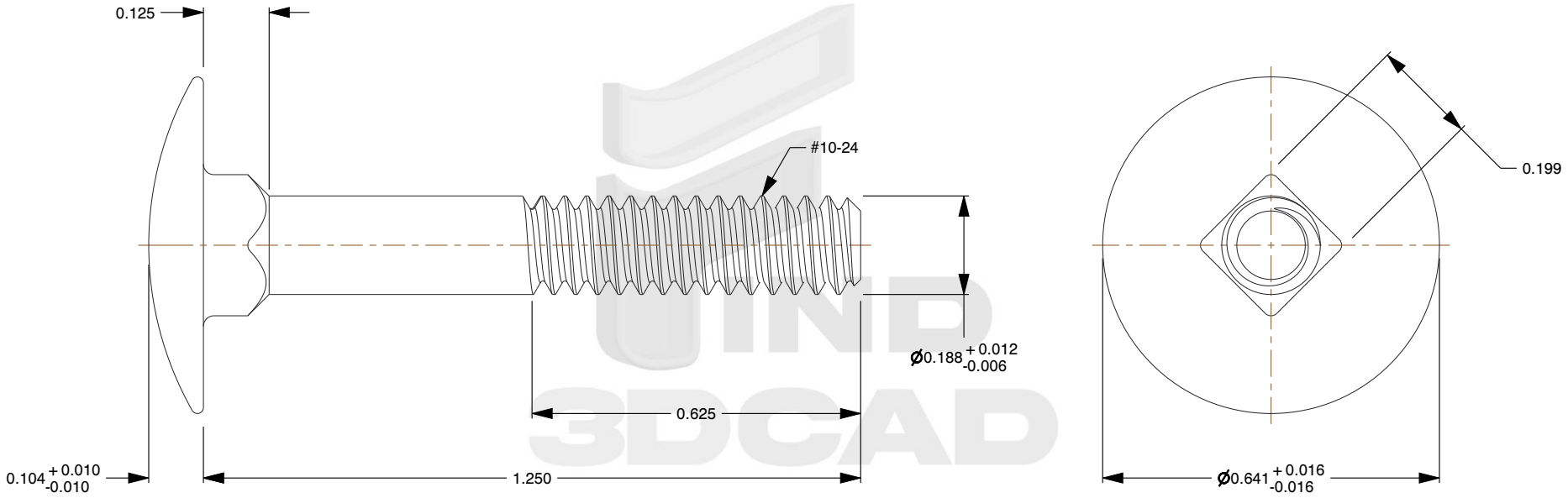

Notes:

1. **Category:** Step Bolts
2. **System of Measurement:** Inch
3. **Head Style:** Truss Head
4. **Head Style Detail:** Square Neck
5. **Thread Length:** Standard Thread Length
6. **Thread Direction:** Right-Hand Thread

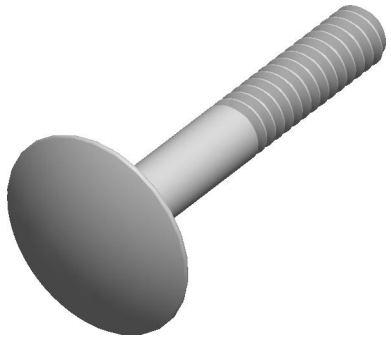

find3dcad

THIRD ANGLE PROJECTION

This file and the related information are provided for reference only and may change without notice. find3dcad does not guarantee the accuracy, completeness, or suitability of this file or the information provided. You are responsible for how you use this file and its information.

This document is the property of find3dcad. The information in it may not be copied, shared, or given to any third party without written permission from find3dcad.

TITLE	DESCRIPTION
Carriage Bolts	#10-24 X 1-1/4" Step Bolts, Truss Head, Square Neck, Steel, Zinc Plated

Sheet Size	PART NUMBER	Rev.	ISSUED
A	IATHSNB037-1024X114	01	2026-10-20

SCALE: 3.259 | Unless otherwise specified Dimensions are in INCHES