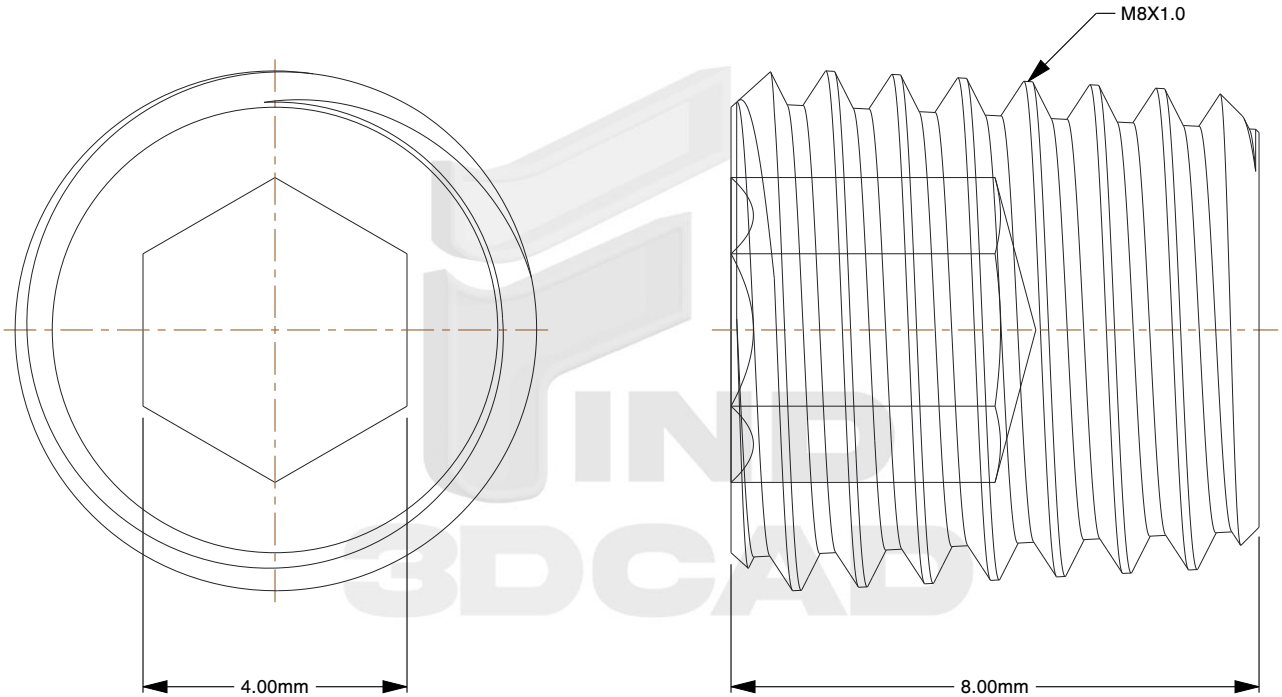

Notes:

1. **Thread Diameter + Pitch:** M8X1.0
2. **Thread Direction:** Right Hand
3. **Type:** Tapered Drain Plug
4. **Material:** A2-50 Stainless Steel
5. **Finish:** Plain
6. **Type DP Thread:** Tapered
7. **Overall Length:** 8mm
8. **Drive:** 4mm Allen Socket
9. **Specification:** DIN 906

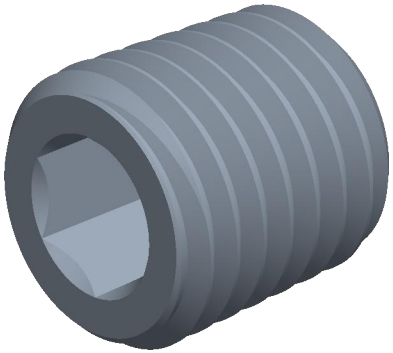

find3dcad

THIRD ANGLE PROJECTION

This file and the related information are provided for reference only and may change without notice. find3dcad does not guarantee the accuracy, completeness, or suitability of this file or the information provided. You are responsible for how you use this file and its information.

This document is the property of find3dcad. The information in it may not be copied, shared, or given to any third party without written permission from find3dcad.

TITLE	DESCRIPTION
Tapered Drain Plug	Taper Allen Socket Plug Stainless Steel DIN 906

Sheet Size	PART NUMBER	Rev.	ISSUED
A	MDTDP8X1-0TSS	01	2026-10-13

SCALE: 8.731	Unless otherwise specified Dimensions are in MILLIMETERS