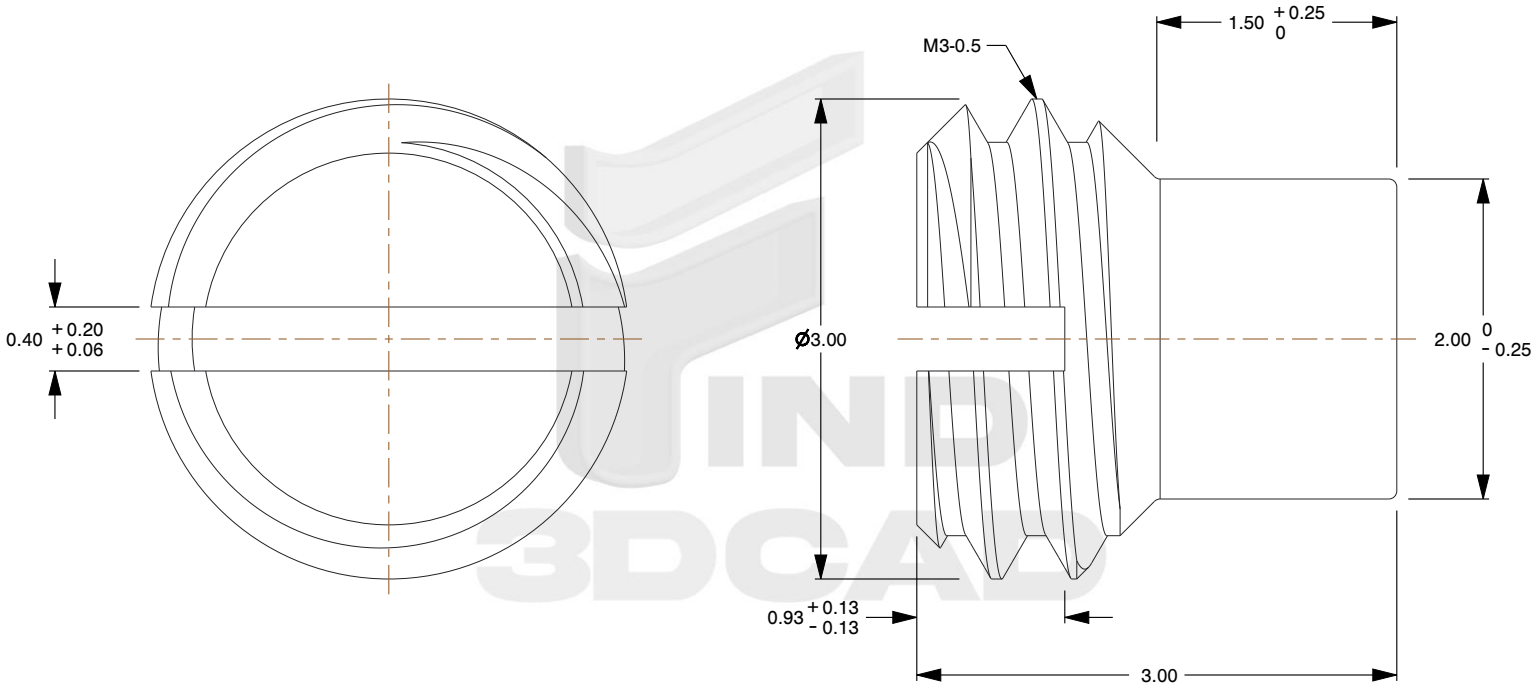

Notes:

1. **Category:** Set Screws
2. **System of Measurement:** Metric
3. **Head Style:** Headless
4. **Drive Style:** Slotted Drive
5. **Thread Length:** Full Thread
6. **Thread Direction:** Right-Hand Thread
7. **Point:** Long Dog Point
8. **Material:** Stainless Steel
9. **Material Grade:** A2 Stainless Steel
10. **Coating:** Uncoated
11. **Origin:** Origin Undefined
12. **Standards and Specifications:** DIN 417 / ISO 7435

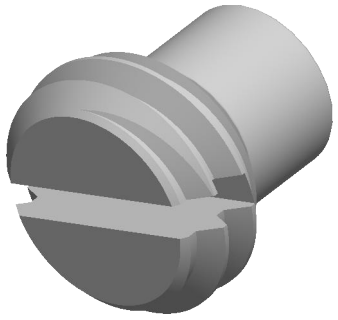

find3dcad

THIRD ANGLE PROJECTION

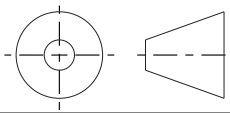

This file and the related information are provided for reference only and may change without notice. find3dcad does not guarantee the accuracy, completeness, or suitability of this file or the information provided. You are responsible for how you use this file and its information.

This document is the property of find3dcad. The information in it may not be copied, shared, or given to any third party without written permission from find3dcad.

DESCRIPTION

M3-0.5 X 3mm DIN 417 / ISO 7435, Metric, Slotted Set Screws, Long Dog Point, Full Thread, A2 Stainless Steel

TITLE

Set Screws

Sheet Size	PART NUMBER	Rev.	ISSUED
A	MDSSS544-305X3	01	2026-10-16

SCALE: 21.167

Unless otherwise specified Dimensions are in MILLIMETERS