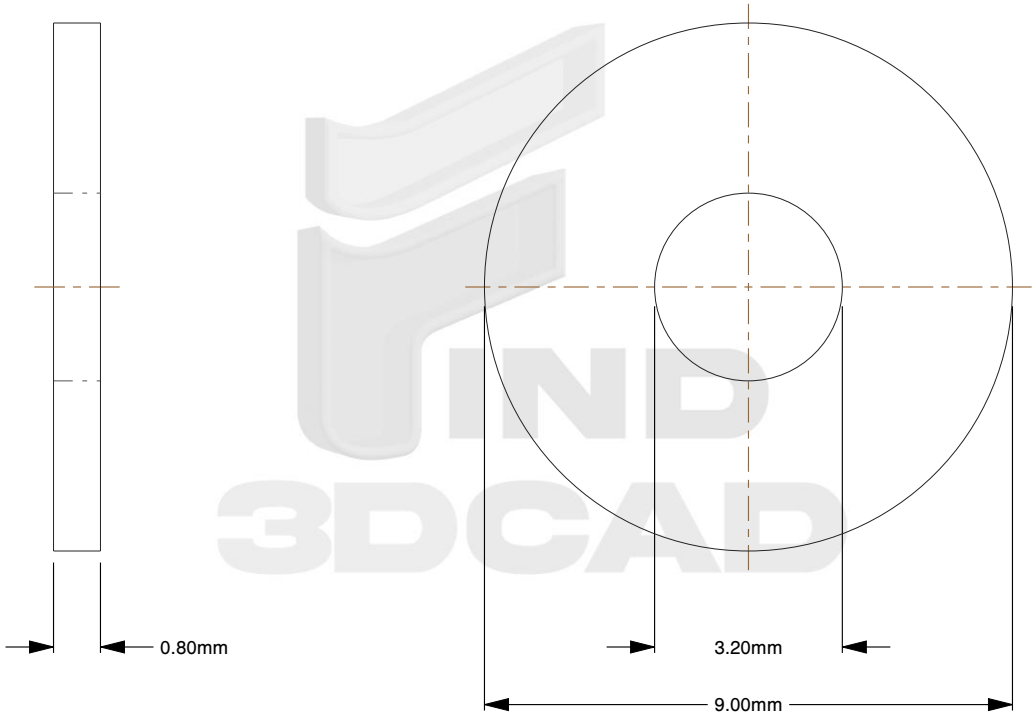

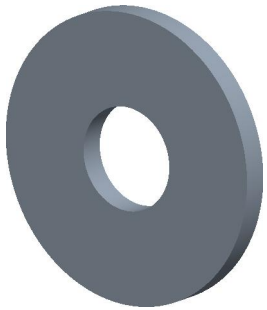

Notes:

1. **For Screw/Bolt Size:** M3
2. **Type:** Fender Washer
3. **Form:** Oversized Outer Diameter
4. **Material:** HV 200 Hardened
5. **Thickness:** 0.8mm
6. **Inner Diameter:** 3.2mm
7. **Outer Diameter:** 9mm
8. **Measurement System:** Metric
9. **Specification:** ISO 7093

https://find3dcad.com/

THIRD ANGLE PROJECTION

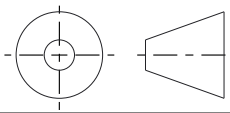

This file and the related information are provided for reference only and may change without notice. FIND 3D CAD does not guarantee the accuracy, completeness, or suitability of this file or the information provided. You are responsible for how you use this file and its information.

This document is the property of FIND 3D CAD. The information in it may not be copied, shared, or given to any third party without written permission from FIND 3D CAD.

DESCRIPTION

Fender Washer ISO 7093
HV-200 Steel Hardened

TITLE

Fender Washer

Sheet Size	PART NUMBER	Rev.	ISSUED
A	FW3X9SH	01	2026-08-26

SCALE: 7.761

Unless otherwise specified Dimensions are in MILLIMETERS