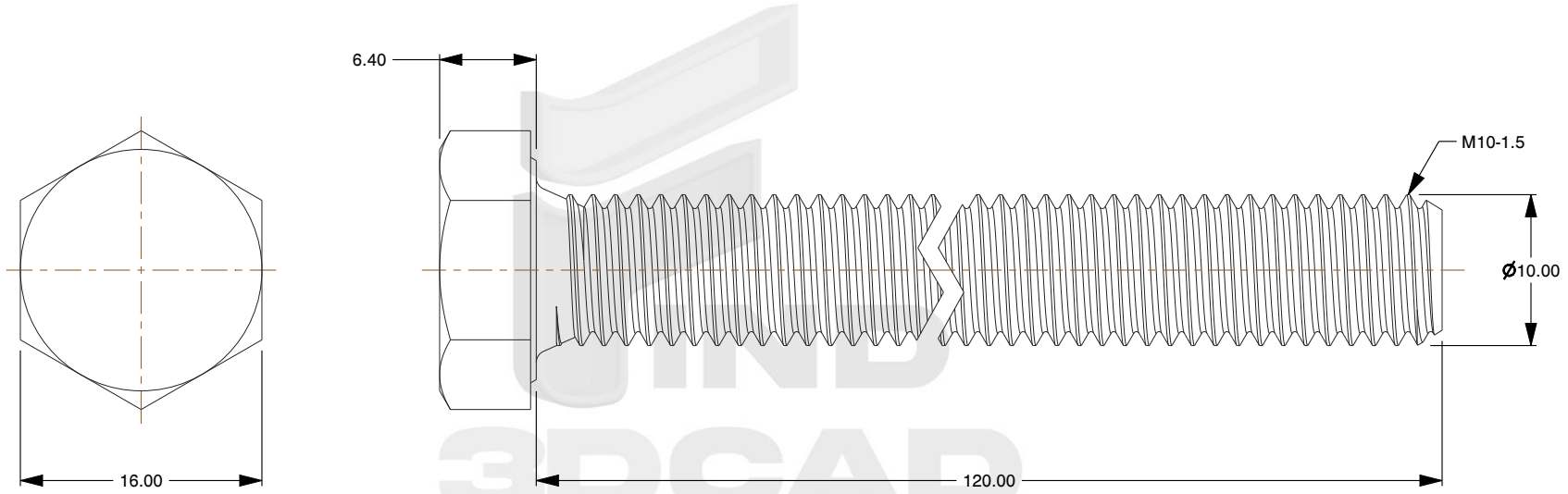

Notes:

1. **Category:** Cap Screws
2. **System of Measurement:** Metric
3. **Head Style:** Hex Head
4. **Head Style Detail:** Washer Face
5. **Drive Style:** External Hex Drive
6. **Pitch:** Coarse Thread
7. **Thread Length:** Full Thread
8. **Thread Direction:** Right-Hand Thread
9. **Point:** Chamfered Point
10. **Material:** Stainless Steel
11. **Material Grade:** A4 Stainless Steel
12. **Coating:** Uncoated
13. **Standards and Specifications:** ISO 4017

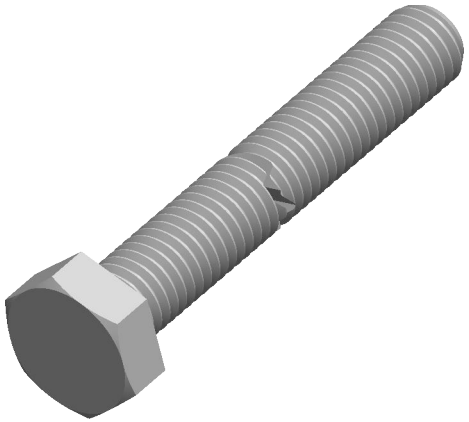

find3dcad

THIRD ANGLE PROJECTION

This file and the related information are provided for reference only and may change without notice. find3dcad does not guarantee the accuracy, completeness, or suitability of this file or the information provided. You are responsible for how you use this file and its information.

This document is the property of find3dcad. The information in it may not be copied, shared, or given to any third party without written permission from find3dcad.

DESCRIPTION

M10-1.5 X 120mm ISO 4017, Metric, Hex Head Cap Screws Bolts, Full Thread, A4 Stainless Steel

TITLE

Sheet Size	PART NUMBER	Rev.	ISSUED
A	ME502-1015X120	01	2026-10-20

SCALE: 2.158

Unless otherwise specified Dimensions are in MILLIMETERS