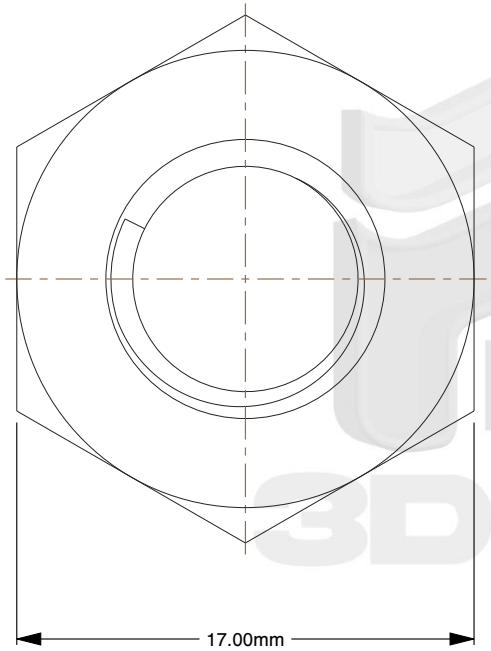

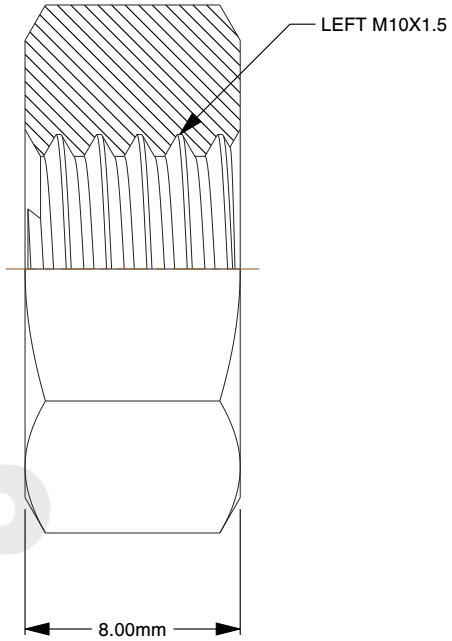

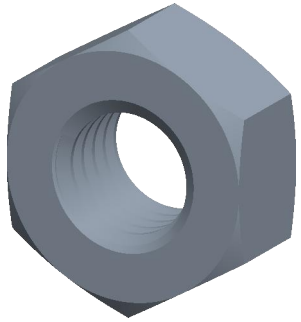

Notes:

1. **Thread Diameter + Pitch:** LEFT M10X1.5
2. **Thread Direction:** Left Hand / Reverse
3. **Type:** Left Handed Nut
4. **Material:** Class 8 Steel
5. **Finish:** Zinc Plated
6. **Drive:** 17mm Wrench
7. **Height:** 8mm
8. **Measurement System:** Metric
9. **Specification:** DIN 934-LH

find3dcad

THIRD ANGLE PROJECTION

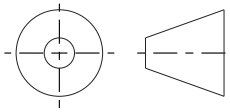

This file and the related information are provided for reference only and may change without notice. find3dcad does not guarantee the accuracy, completeness, or suitability of this file or the information provided. You are responsible for how you use this file and its information.

This document is the property of find3dcad. The information in it may not be copied, shared, or given to any third party without written permission from find3dcad.

TITLE	DESCRIPTION
Hex Nut	Left Hand Hex Nut Steel, Class Varies DIN 934-LH

Sheet Size	PART NUMBER	Rev.	ISSUED
A	MDHNLH10CLZ	01	2026-10-13

SCALE: 3.558	Unless otherwise specified Dimensions are in MILLIMETERS