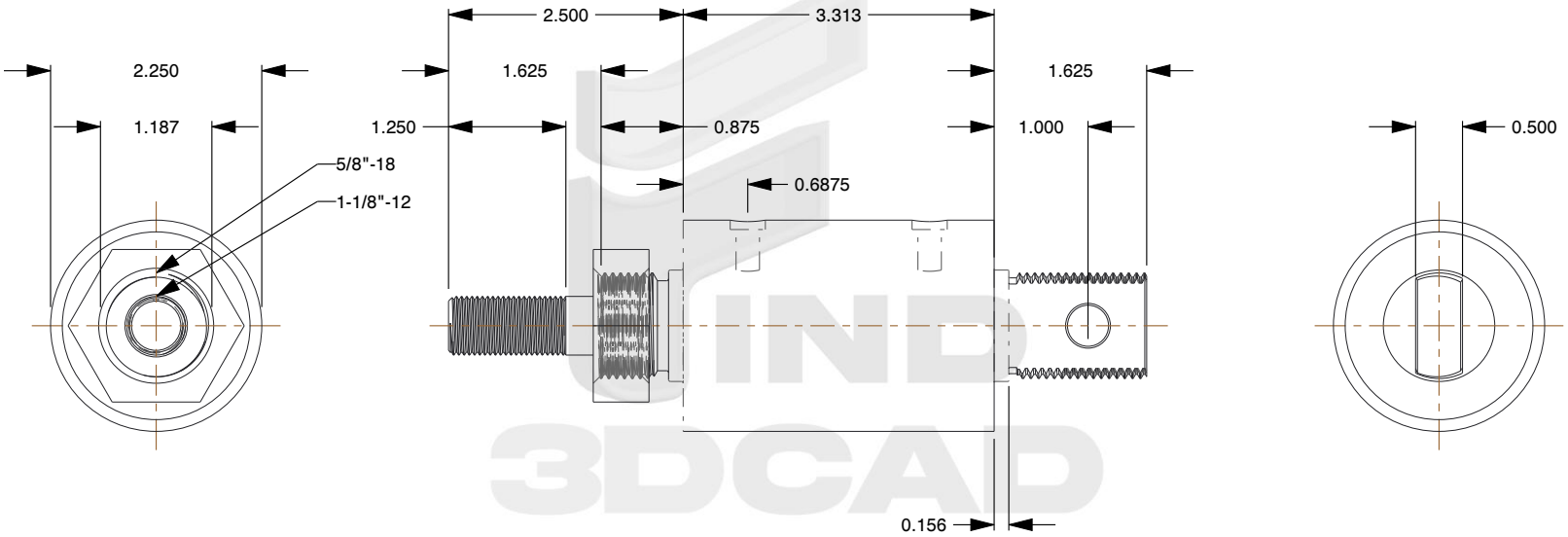

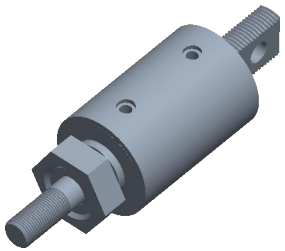

1. **Stroke Sizes:** Any stroke up to 130
2. **Cushions available:** Either/both ends
3. **Pneumatic:** 152 psi maximum
4. **Hydraulic:** Consult factory
5. Operating systems can be pneumatic or hydraulic
6. Low friction pneumatic
7. Use in low pressure applications
8. low minimum breakaway is required
9. **Service is available with Series O,F,H,D,FTM**

find3dcad

THIRD ANGLE PROJECTION

This file and the related information are provided for reference only and may change without notice. find3dcad does not guarantee the accuracy, completeness, or suitability of this file or the information provided. You are responsible for how you use this file and its information.

This document is the property of find3dcad. The information in it may not be copied, shared, or given to any third party without written permission from find3dcad.

DESCRIPTION

FLAIRLINE HI-CYCLE
SERIES F,O,H,D TYPE
CYLINDERS

TITLE

Sheet Size	PART NUMBER	Rev.	ISSUED
A	F2X2-25	01	2026-10-22

SCALE: 0.503

Unless otherwise specified Dimensions are in INCH