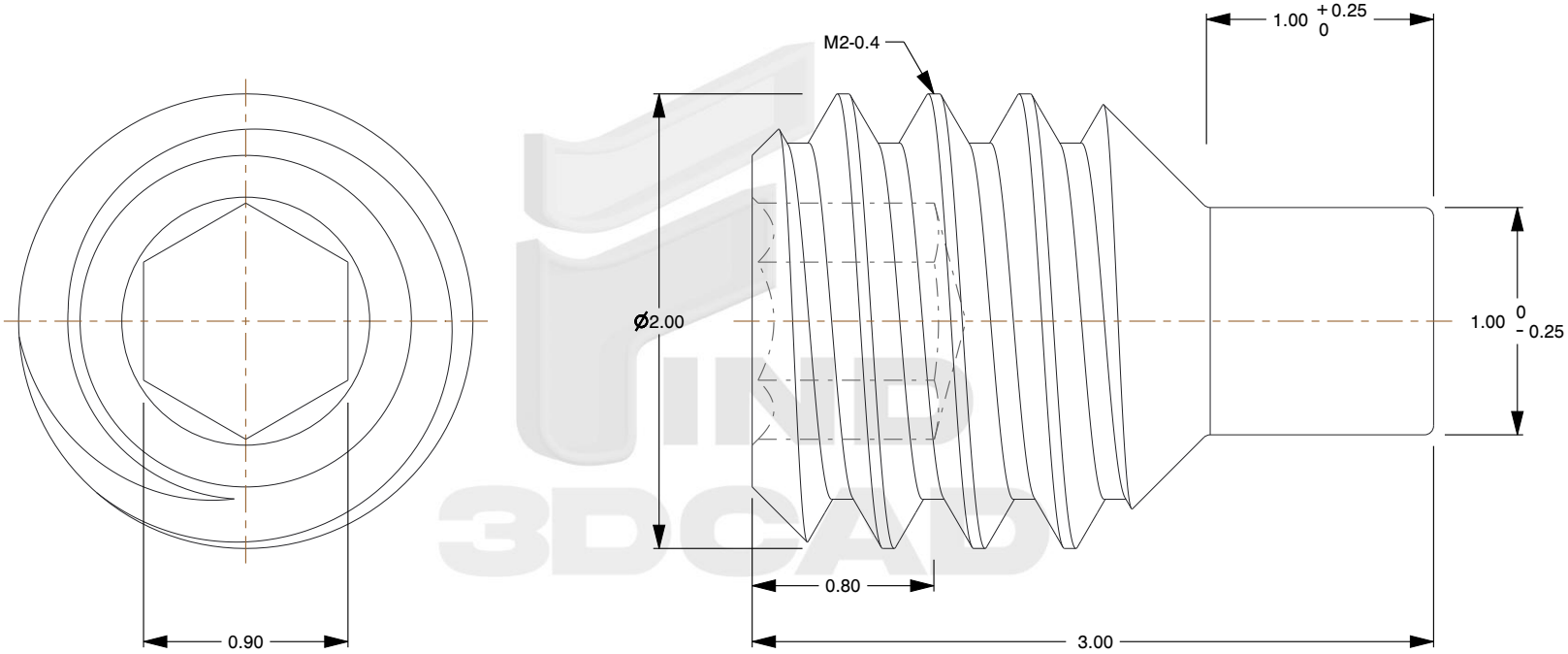

Notes:

1. **Category:** Set Screws
2. **System of Measurement:** Metric
3. **Head Style:** Headless
4. **Drive Style:** Hex Socket Drive
5. **Thread Length:** Full Thread
6. **Thread Direction:** Right-Hand Thread
7. **Point:** Dog Point
8. **Material:** Stainless Steel
9. **Material Grade:** A4 Stainless Steel
10. **Coating:** Uncoated
11. **Origin:** Origin Undefined
12. **Standards and Specifications:** DIN 915 / ISO 4028

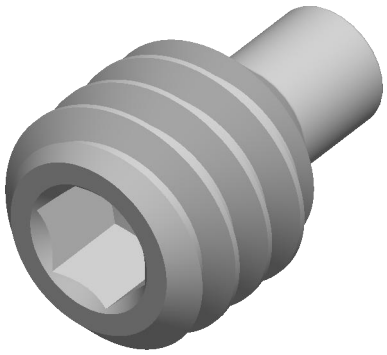

find3dcad

THIRD ANGLE PROJECTION

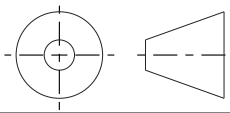

This file and the related information are provided for reference only and may change without notice. find3dcad does not guarantee the accuracy, completeness, or suitability of this file or the information provided. You are responsible for how you use this file and its information.

This document is the property of find3dcad. The information in it may not be copied, shared, or given to any third party without written permission from find3dcad.

DESCRIPTION

M2-0.4 X 3mm DIN 915 / ISO 4028, Metric, Hex Socket Set Screws, Dog Point, A4 Stainless Steel

TITLE

Set Screws

Sheet Size	PART NUMBER	Rev.	ISSUED
A	MDHSSS540-204X3	01	2026-10-16

SCALE: 30.988

Unless otherwise specified Dimensions are in MILLIMETERS