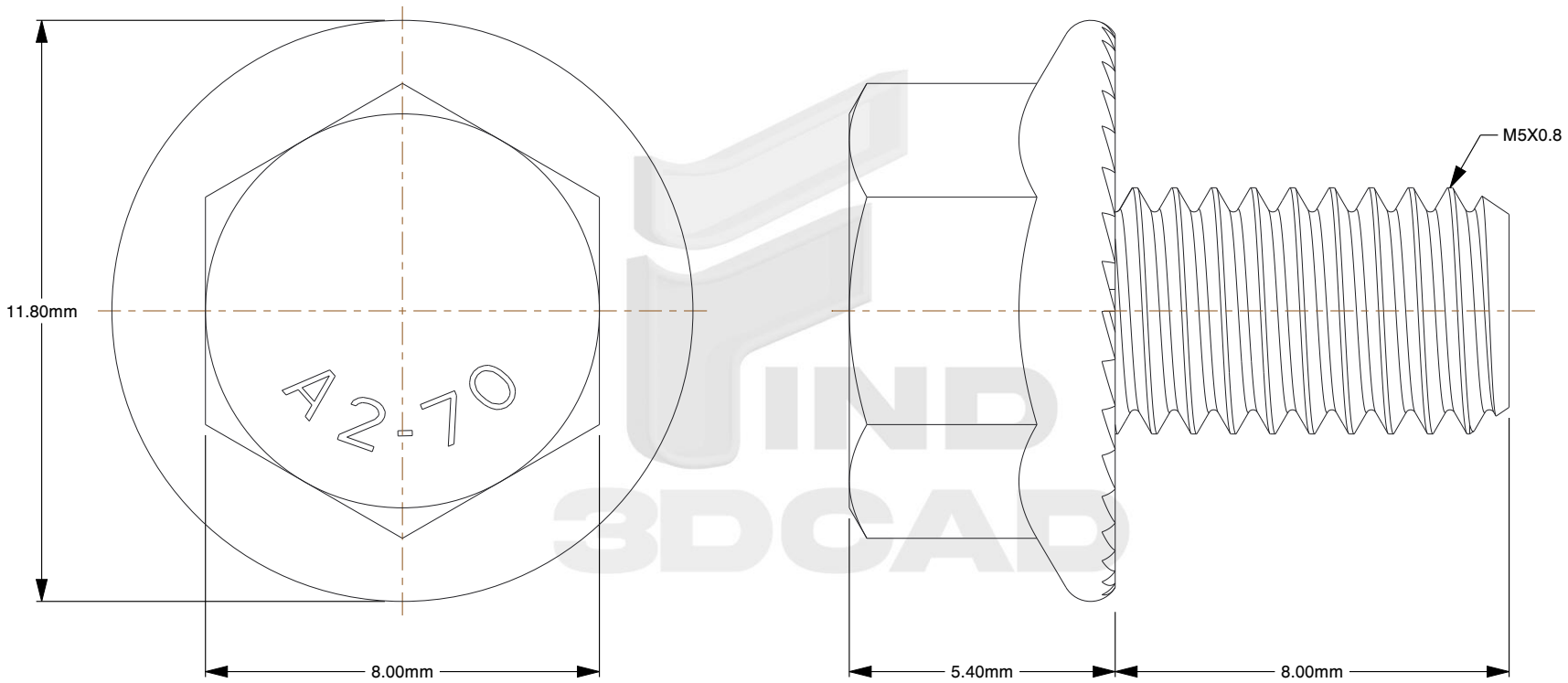

Notes:

1. **Specification:** DIN 6921
2. **Thread Diameter + Pitch:** M5X0.8
3. **Length:** 8mm
4. **Thread Amount:** Full Thread
5. **Threaded Length:** 8mm
6. **Unthreaded Length:** 0mm
7. **Material:** A2-70 Stainless Steel
8. **Finish:** Plain
9. **Flange Type:** Serrated
10. **Flange Width:** 11.8mm
11. **Head Height:** 5.4mm
12. **Drive:** 8mm Wrench
13. **Type Screw/Bolt:** Hex Flange Head
14. **Thread Direction:** Right Hand
15. **Measurement System:** Metric

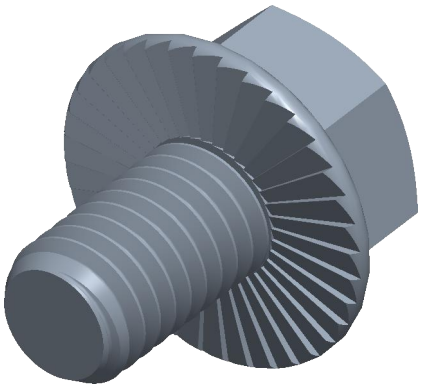

THIRD ANGLE PROJECTION

This file and the related information are provided for reference only and may change without notice. find3dcad does not guarantee the accuracy, completeness, or suitability of this file or the information provided. You are responsible for how you use this file and its information.

This document is the property of find3dcad. The information in it may not be copied, shared, or given to any third party without written permission from find3dcad.

TITLE	PART NUMBER
Hex Serrated Flange Bolts	MDHSFB5X8SRSS

PART NUMBER	DESCRIPTION
MDHSFB5X8SRSS	M5X0.8 Serrated Flange Bolt A2-70 Stainless DIN 6921 / 8mm Wrench

Sheet Size	Design Code	Drawing No.	Rev.	ISSUED
A	001	10001	01	2026-10-13

SCALE: 7.125

Unless otherwise specified Dimensions are in INCHES