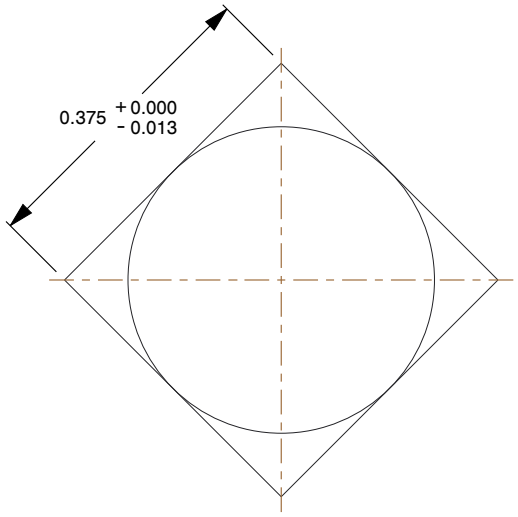

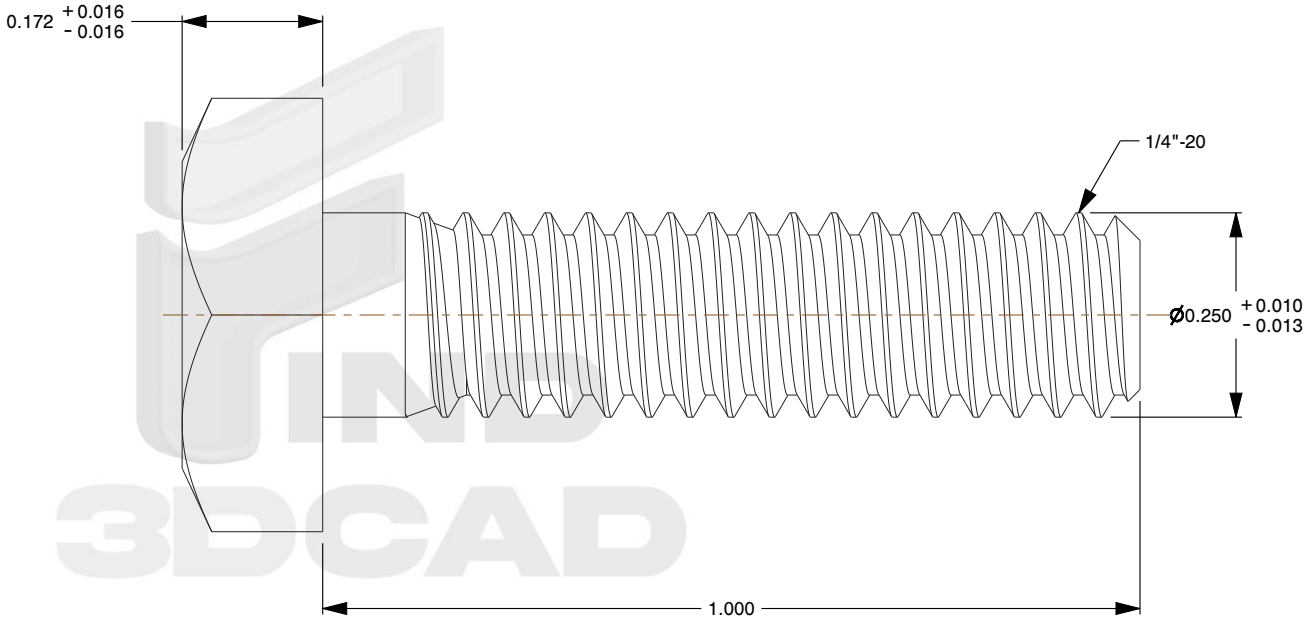

Notes:

1. **Category:** Machine Bolts
2. **System of Measurement:** Inch
3. **Head Style:** Square Head
4. **Drive Style:** External Square Drive
5. **Thread Length:** Full Thread
6. **Thread Direction:** Right-Hand Thread
7. **Material:** Steel
8. **Material Grade:** A307 Steel
9. **Coating:** Uncoated
10. **Origin:** Origin Undefined
11. **Standards and Specifications:** ASME B18.2.1

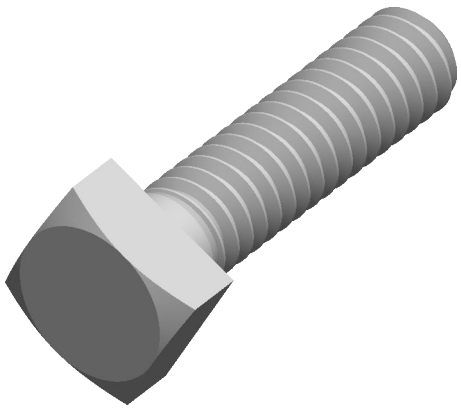

find3dcad

THIRD ANGLE PROJECTION

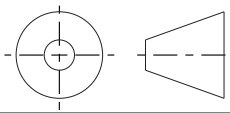

This file and the related information are provided for reference only and may change without notice. find3dcad does not guarantee the accuracy, completeness, or suitability of this file or the information provided. You are responsible for how you use this file and its information.

This document is the property of find3dcad. The information in it may not be copied, shared, or given to any third party without written permission from find3dcad.

DESCRIPTION

1/4"-20 X 1" Machine Bolts, Square Head, Full Thread, A307 Steel, Plain

TITLE

Machine Bolts

Sheet Size	PART NUMBER	Rev.	ISSUED
A	079-1420X1	01	2026-10-13

SCALE: 4.257

Unless otherwise specified Dimensions are in INCHES