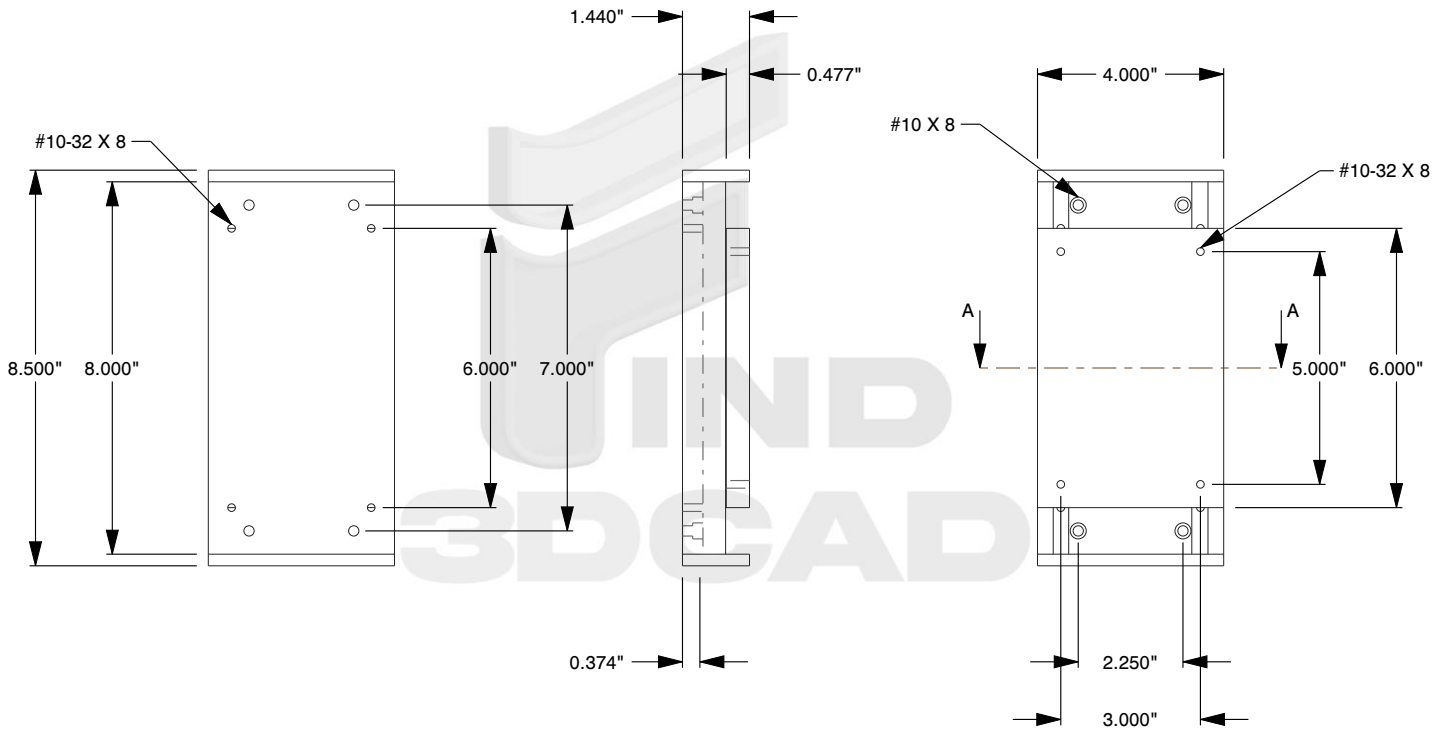

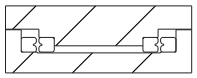

SECTION A-A

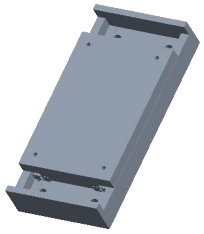

Notes:

- Designed for precise, play-free motion under heavy loads
- Positioning accuracy: 0.0001 per inch
- Error as low as 0.0002 per foot
- No slip-stick effect - smooth, noiseless travel
- Available in 6061-T6 aluminum
- High-strength alloy steel fasteners
- Available in cast iron for "heavy duty" applications
- For high-speed continuous travel (>50 in/min)
- Available in both standard and low-profile designs

find3dcad

THIRD ANGLE PROJECTION

This file and the related information are provided for reference only and may change without notice. find3dcad does not guarantee the accuracy, completeness, or suitability of this file or the information provided. You are responsible for how you use this file and its information.

This document is the property of find3dcad. The information in it may not be copied, shared, or given to any third party without written permission from find3dcad.

DESCRIPTION

Standard Crossed Roller
Slide Assemblies

TITLE

SLIDE ASSEMBLIES

Sheet Size	PART NUMBER	Rev.	ISSUED
A	P4-8-2	01	2026-10-13

SCALE: 0.242

Unless otherwise specified Dimensions are in INCHES