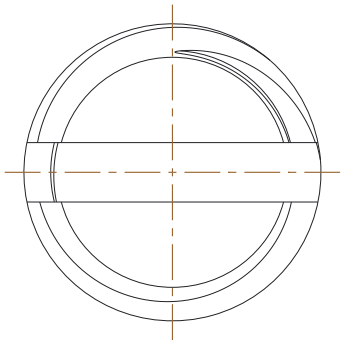

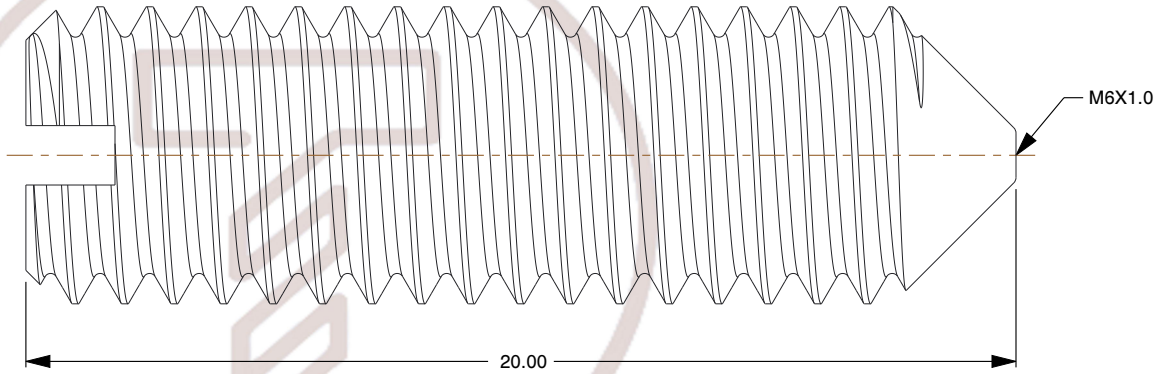

Notes:

1. **Specification:** DIN 553
2. **Thread Diameter + Pitch:** M6X1.0
3. **Thread Direction:** Right Hand
4. **Type:** Set Screw
5. **Material:** Brass
6. **Finish:** Plain
7. **Drive:** Slotted
8. **Overall Length:** 20mm
9. **Tip Type:** Cone
10. **Measurement System:** Metric

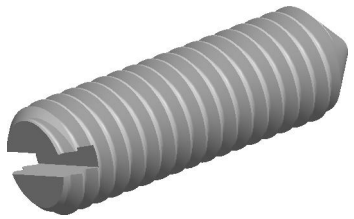

find3dcad

THIRD ANGLE PROJECTION

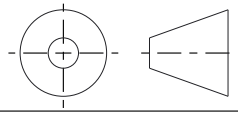

This file and the related information are provided for reference only and may change without notice. TOREC Screws does not guarantee the accuracy, completeness, or suitability of this file or the information provided. You are responsible for how you use this file and its information.

This document is the property of TOREC Screws. The information in it may not be copied, shared, or given to any third party without written permission from TOREC Screws.

DESCRIPTION

M6X1.0 Cone Point Grub Screw
Slotted Drive, Brass
DIN 553 / ISO 7434

TITLE

Set Screws

Sheet Size	PART NUMBER	Rev.	ISSUED
A	MDCPSSS6X20SLCONEBRS	01	2026-10-27

SCALE: 6.549

Unless otherwise specified Dimensions are in MILLIMETERS