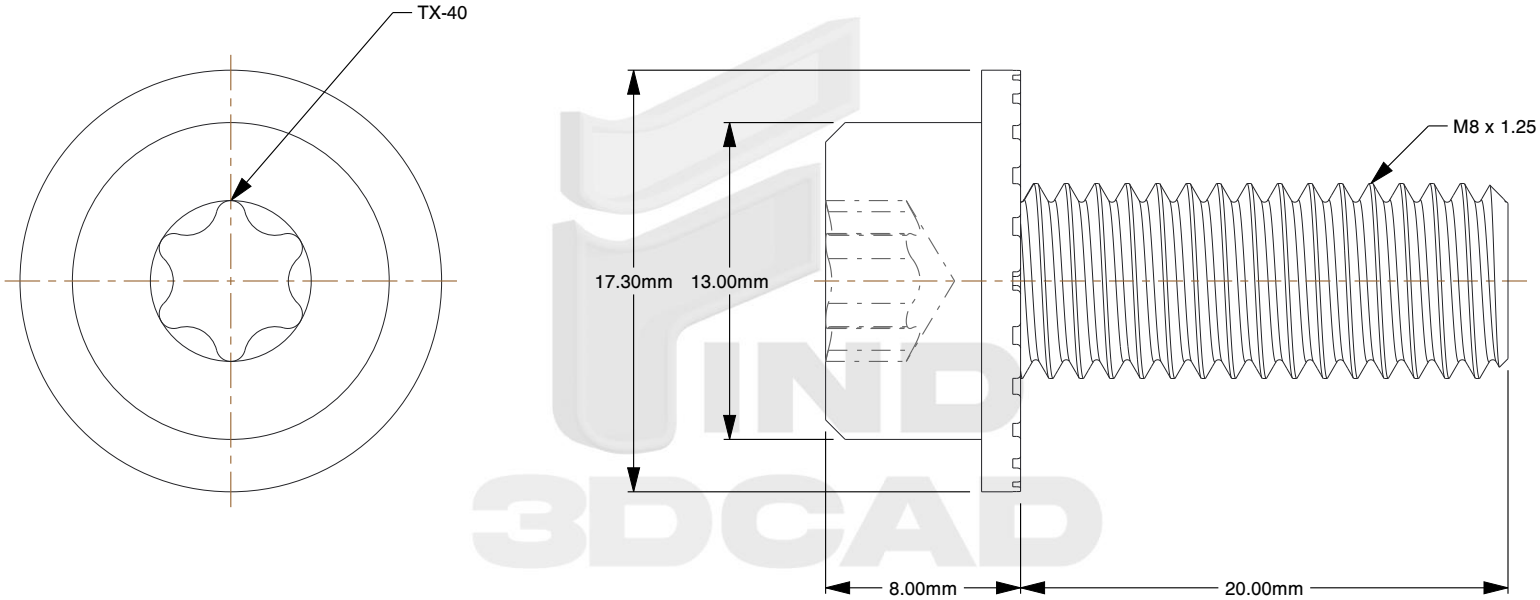

Notes:

1. **Specification:** ISO 14579-TX
2. **Thread Diameter + Pitch:** M8X1.25
3. **Length:** 20mm
4. **Thread Amount:** Full Thread
5. **Threaded Length:** 20mm
6. **Unthreaded Length:** 0mm
7. **Material:** A2-70 Stainless Steel
8. **Finish:** Plain
9. **Flange Type:** Serrated
10. **Flange Width:** 17.3mm
11. **Head Diameter:** 13mm
12. **Head Height:** 8mm
13. **Drive:** T40 Torx Socket
14. **Type Screw/Bolt:** Socket Head Flange
15. **Thread Direction:** Right Hand
16. **Measurement System:** Metric

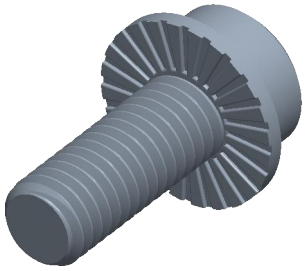

find3dcad

THIRD ANGLE PROJECTION

This file and the related information are provided for reference only and may change without notice. find3dcad does not guarantee the accuracy, completeness, or suitability of this file or the information provided. You are responsible for how you use this file and its information.

This document is the property of find3dcad. The information in it may not be copied, shared, or given to any third party without written permission from find3dcad.

TITLE	DESCRIPTION
Socket Head Flange Bolts	M8 Torx Socket Flange Bolt Stainless Steel A2-70 Serrated Flange

Sheet Size	PART NUMBER	Rev.	ISSUED
A	MDTSHFB8X20TXFLSRSS	01	2026-10-20

SCALE: 3.224	Unless otherwise specified Dimensions are in MILLIMETERS