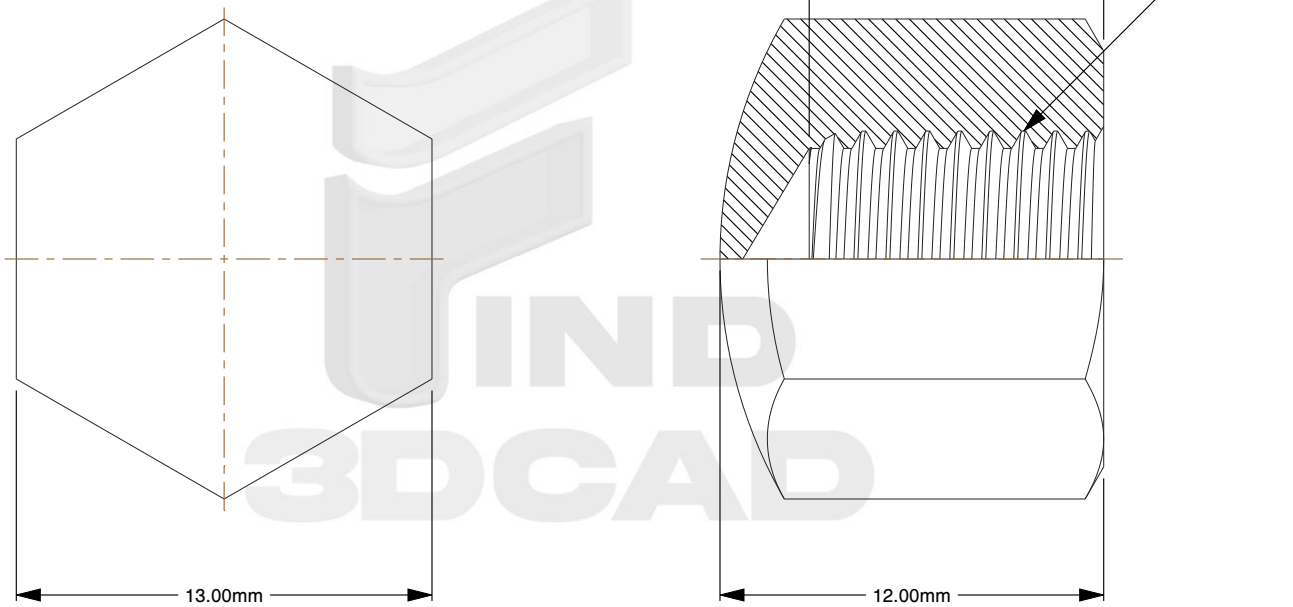

Notes:

1. **Thread Diameter + Pitch:** M8X1.0
2. **Thread Direction:** Right Hand
3. **Type:** Cap Nut
4. **Material:** Class 6 Steel
5. **Finish:** Yellow Zinc Plated
6. **Drive:** 13mm Wrench
7. **Internal Thread Depth:** 9.21mm
8. **Height:** 12mm
9. **Profile:** Normal
10. **Measurement System:** Metric
11. **Specification:** DIN 917

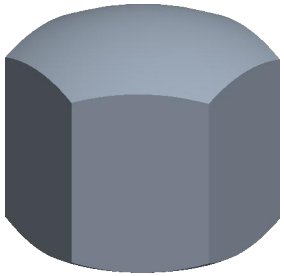

find3dcad

THIRD ANGLE PROJECTION

This file and the related information are provided for reference only and may change without notice. find3dcad does not guarantee the accuracy, completeness, or suitability of this file or the information provided. You are responsible for how you use this file and its information.

This document is the property of find3dcad. The information in it may not be copied, shared, or given to any third party without written permission from find3dcad.

TITLE	DESCRIPTION
Cap Nut	Cap Nut Fine Steel Class 6 DIN 917

Sheet Size	PART NUMBER	Rev.	ISSUED
A	MDCN8X1-0YLW	01	2026-10-16

SCALE: 4.230

Unless otherwise specified Dimensions are in MILLIMETERS