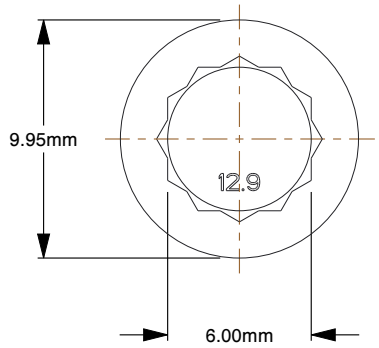

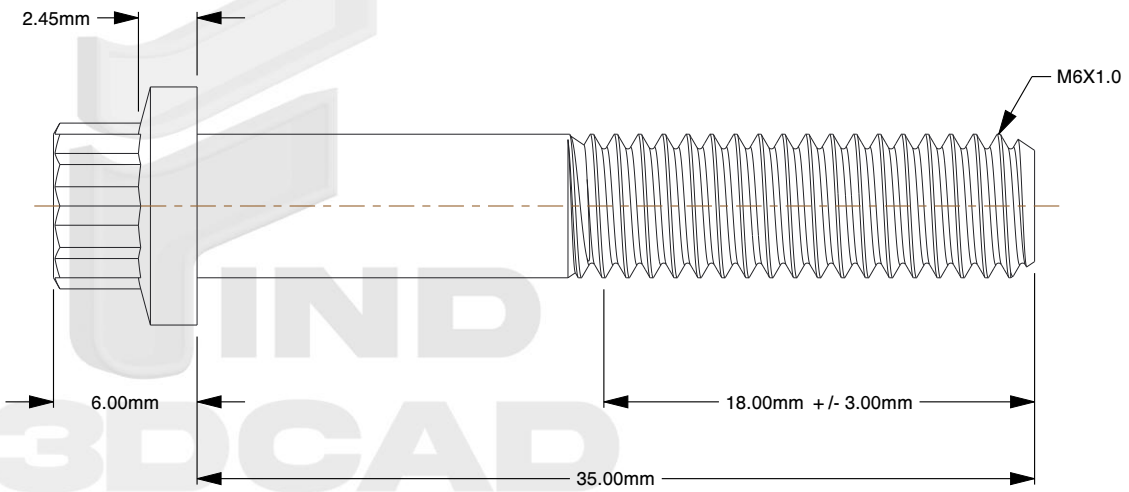

Notes:

1. **Specification:** ASME B18.2.5.M
2. **Thread Diameter + Pitch:** M6X1.0
3. **Length:** 35mm
4. **Thread Amount:** Partial Thread
5. **Threaded Length:** 18mm +/- 3mm
6. **Unthreaded Length:** 17mm +/- 3mm
7. **Material:** Class 12.9 Steel
8. **Finish:** Black Oxide
9. **Flange Type:** Smooth
10. **Flange Width:** 9.95mm
11. **Flange Thickness:** 2.45mm
12. **Head Height:** 6mm
13. **Drive:** 6mm 12-Point Wrench
14. **Type Screw/Bolt:** 12-pt Flange
15. **Thread Direction:** Right Hand
16. **Measurement System:** Metric

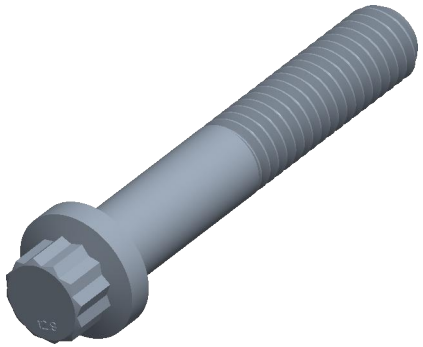

find3dcad	THIRD ANGLE PROJECTION
This file and the related information are provided for reference only and may change without notice. find3dcad does not guarantee the accuracy, completeness, or suitability of this file or the information provided. You are responsible for how you use this file and its information.	This document is the property of find3dcad. The information in it may not be copied, shared, or given to any third party without written permission from find3dcad.
TITLE 12-Point Flange Bolts	PART NUMBER MA12PTFB6X35BLK

PART NUMBER	DESCRIPTION
MA12PTFB6X35BLK	M6 12-Point Flange Bolt Steel Class 12.9 Black ASME B18.2.5.M

Sheet Size	Design Code	Drawing No.	Rev.	ISSUED
A	001	10001	01	2026-10-13
SCALE: 3.166		Unless otherwise specified Dimensions are in INCHES		