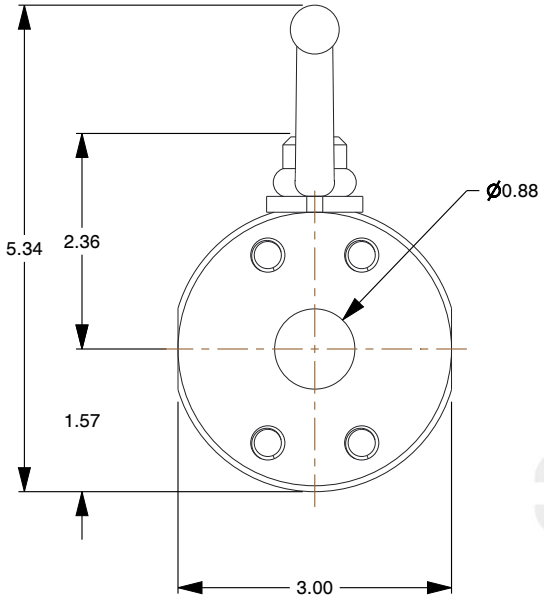

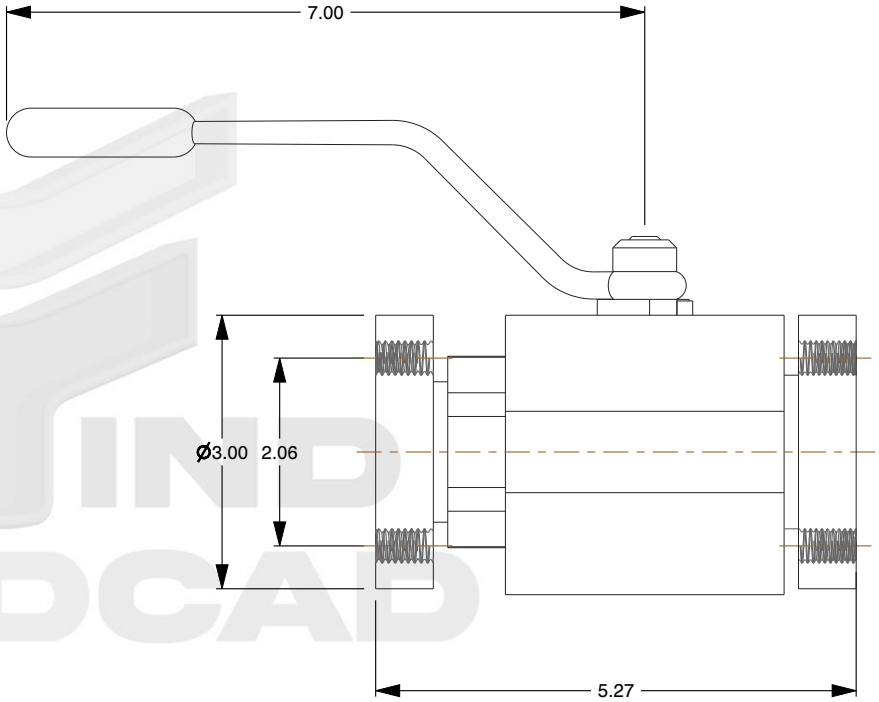

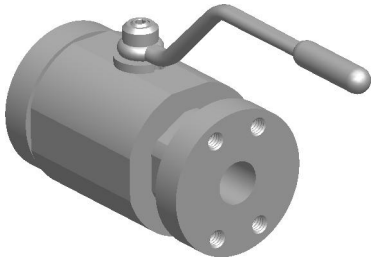

Notes:

1. **Port Size:** 1"
2. **Thread Type:** Flanged
3. **Connection Types:** C.61 SAE 4-Bolt UNC
4. **Body Material:** Aluminum
5. **Ball & Spindle Material:** Brass
6. **Seals, Bushings, Washers:** Delrin
7. **O-Ring Material:** Buna-N (Standard)
8. **Ball & Spindle Material:** Brass

	THIRD ANGLE PROJECTION
This file and the related information are provided for reference only and may change without notice. does not guarantee the accuracy, completeness, or suitability of this file or the information provided. You are responsible for how you use this file and its information.	This document is the property of . The information in it may not be copied, shared, or given to any third party without written permission from .
DESCRIPTION BVH & BVAH 6000 PSI	TITLE

Sheet Size	PART NUMBER	Rev.	ISSUED
A	BVAL1000FM4311		2026-11-16

SCALE: 0.475	Unless otherwise specified Dimensions are in INCHES