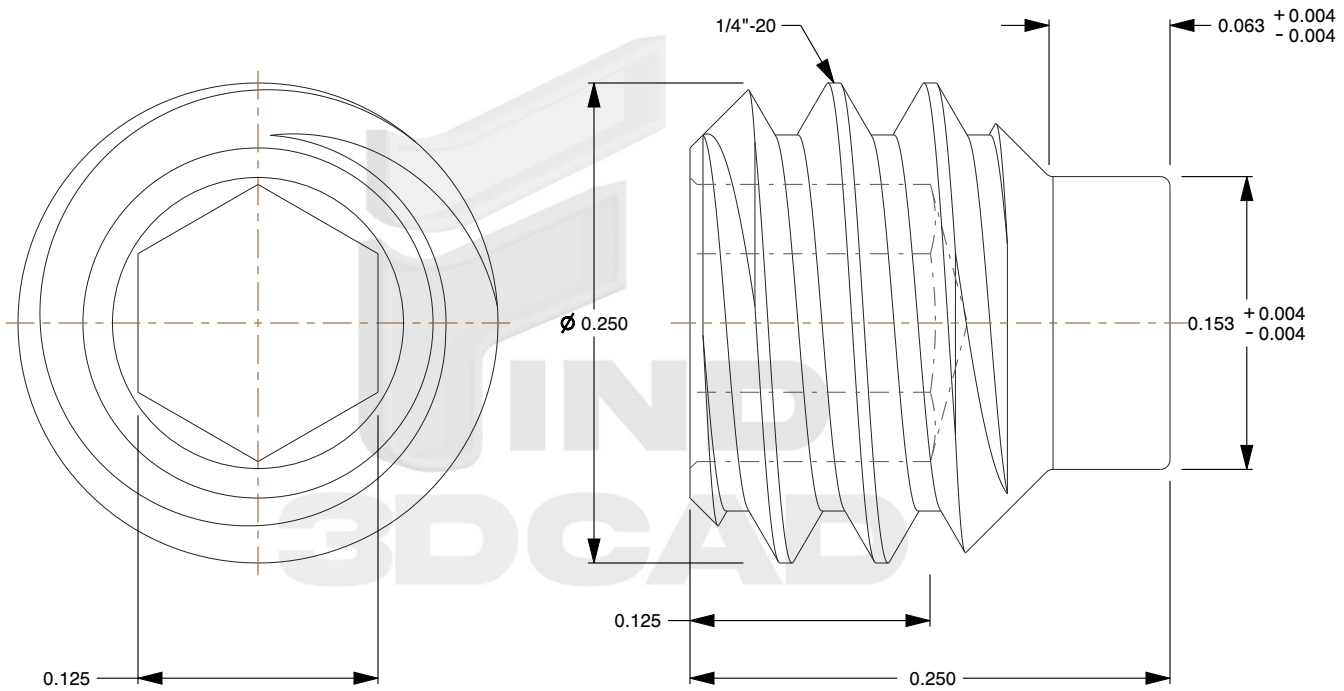

Notes:

1. **Category:** Set Screws
2. **System of Measurement:** Inch
3. **Head Style:** Headless
4. **Drive Style:** Hex Socket Drive
5. **Pitch:** UNRC Coarse Thread
6. **Thread Length:** Full Thread
7. **Thread Direction:** Right-Hand Thread
8. **Point:** Dog Point
9. **Material:** Steel
10. **Material Grade:** Alloy Steel
11. **Coating:** Uncoated
12. **Origin:** Origin Undefined
13. **Standards and Specifications:** ANSI B18.3 and ASTM F912

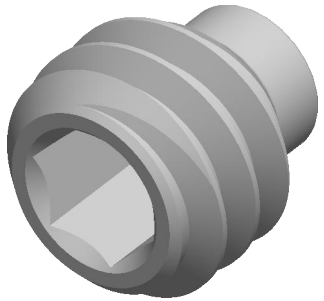

find3dcad

THIRD ANGLE PROJECTION

This file and the related information are provided for reference only and may change without notice. find3dcad does not guarantee the accuracy, completeness, or suitability of this file or the information provided. You are responsible for how you use this file and its information.

This document is the property of find3dcad. The information in it may not be copied, shared, or given to any third party without written permission from find3dcad.

TITLE	DESCRIPTION
Set Screw	1/4"-20 X 1/4" Hex Socket Set Screws, Dog Point, Coarse Thread, Full Thread, Alloy Steel

Sheet Size	PART NUMBER	Rev.	ISSUED
A	IADSSS068-1420X14	01	2026-10-16

SCALE: 10.000

Unless otherwise specified Dimensions are in INCHES