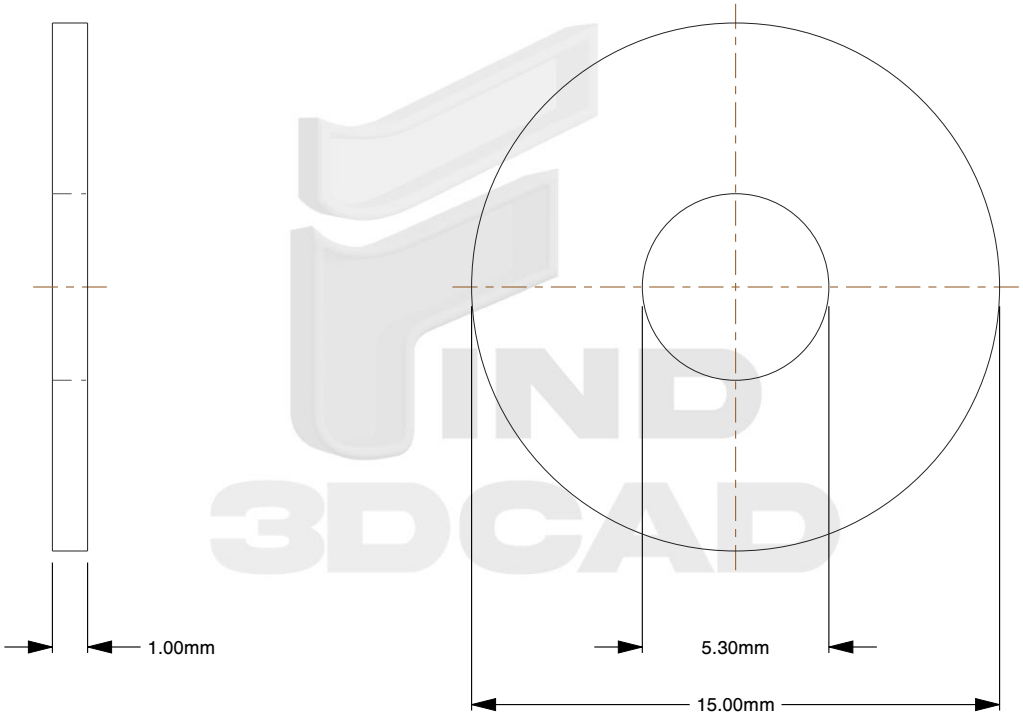

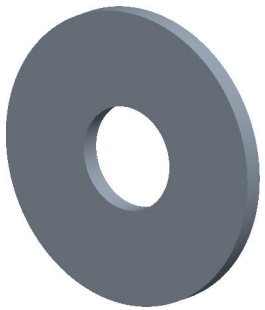

Notes:

1. **For Screw/Bolt Size:** M5
2. **Type:** Fender Washer
3. **Form:** Oversized Outer Diameter
4. **Material:** HV 200 Hardened
5. **Finish:** Zinc Plated
6. **Thickness:** 1mm
7. **Inner Diameter:** 5.3mm
8. **Outer Diameter:** 15mm
9. **Measurement System:** Metric
10. **Specification:** ISO 7093

find3dcad

THIRD ANGLE PROJECTION

This file and the related information are provided for reference only and may change without notice. find3dcad does not guarantee the accuracy, completeness, or suitability of this file or the information provided. You are responsible for how you use this file and its information.

This document is the property of find3dcad. The information in it may not be copied, shared, or given to any third party without written permission from find3dcad.

TITLE	DESCRIPTION
Fender Washer	Fender Washer ISO 7093 HV-200 Steel Hardened Finishes Vary

Sheet Size	PART NUMBER	Rev.	ISSUED
A	MIFWO5X15CLZ	01	2026-10-13

SCALE: 4.657	Unless otherwise specified Dimensions are in MILLIMETERS