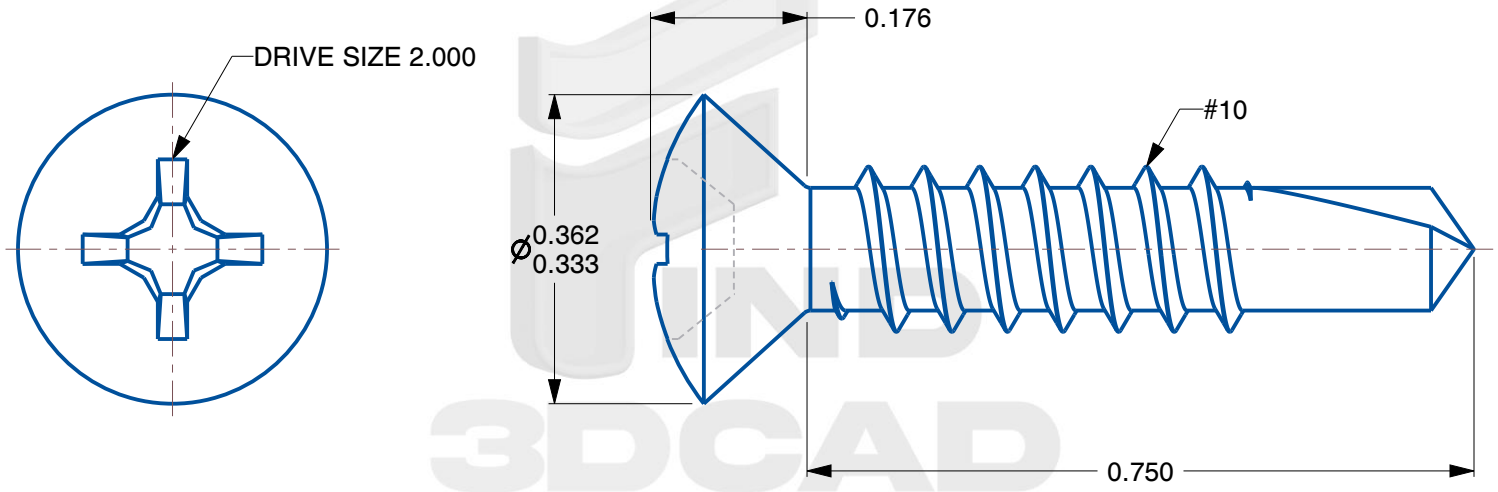

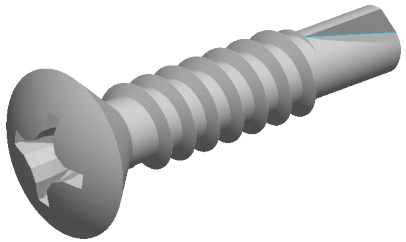

find3dcad		THIRD ANGLE PROJECTION	
This file and the related information are provided for reference only and may change without notice. TOREC Screws does not guarantee the accuracy, completeness, or suitability of this file or the information provided. You are responsible for how you use this file and its information.		This document is the property of TOREC Screws. The information in it may not be copied, shared, or given to any third party without written permission from TOREC Screws.	
DESCRIPTION TEKS Self-Drilling Fasteners 10-16 x 3/4''		TITLE SELF-DRILLING SCREWS	
Sheet Size	PART NUMBER	Rev.	ISSUED
A	1542000	01	2026-10-22
SCALE: 4.632	Unless otherwise specified Dimensions are in INCHES		

Notes: