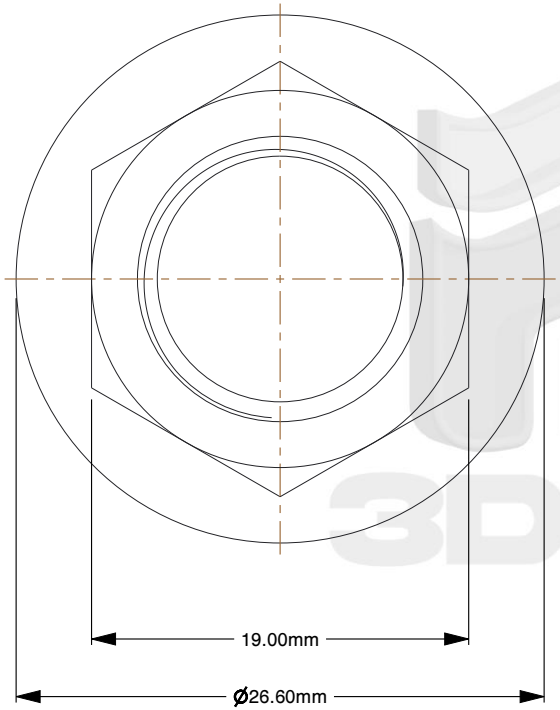

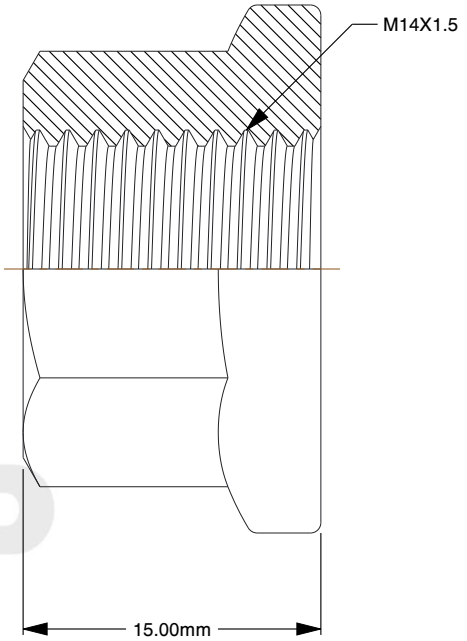

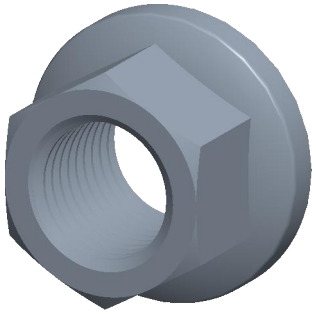

Notes:

1. **Thread Diameter + Pitch:** M14X1.5
2. **Thread Direction:** Right Hand
3. **Type:** Flange Nut
4. **Material:** Class 10 Steel
5. **Finish:** Plain
6. **Drive:** 19mm Wrench
7. **Height:** 15mm
8. **Flange Width:** 26.6mm
9. **Flange Type:** Smooth
10. **Measurement System:** Metric
11. **Specification:** DIN 74361 B

find3dcad

THIRD ANGLE PROJECTION

This file and the related information are provided for reference only and may change without notice. find3dcad does not guarantee the accuracy, completeness, or suitability of this file or the information provided. You are responsible for how you use this file and its information.

This document is the property of find3dcad. The information in it may not be copied, shared, or given to any third party without written permission from find3dcad.

TITLE	DESCRIPTION
Collar Flange Nut	Flat Collar Flange Nut Narrow Flange + Small Wrench DIN 74361 Form B

Sheet Size	PART NUMBER	Rev.	ISSUED
A	MDFCFN14X1-5X19PLN	01	2026-10-16

SCALE: 2.626	Unless otherwise specified Dimensions are in MILLIMETERS