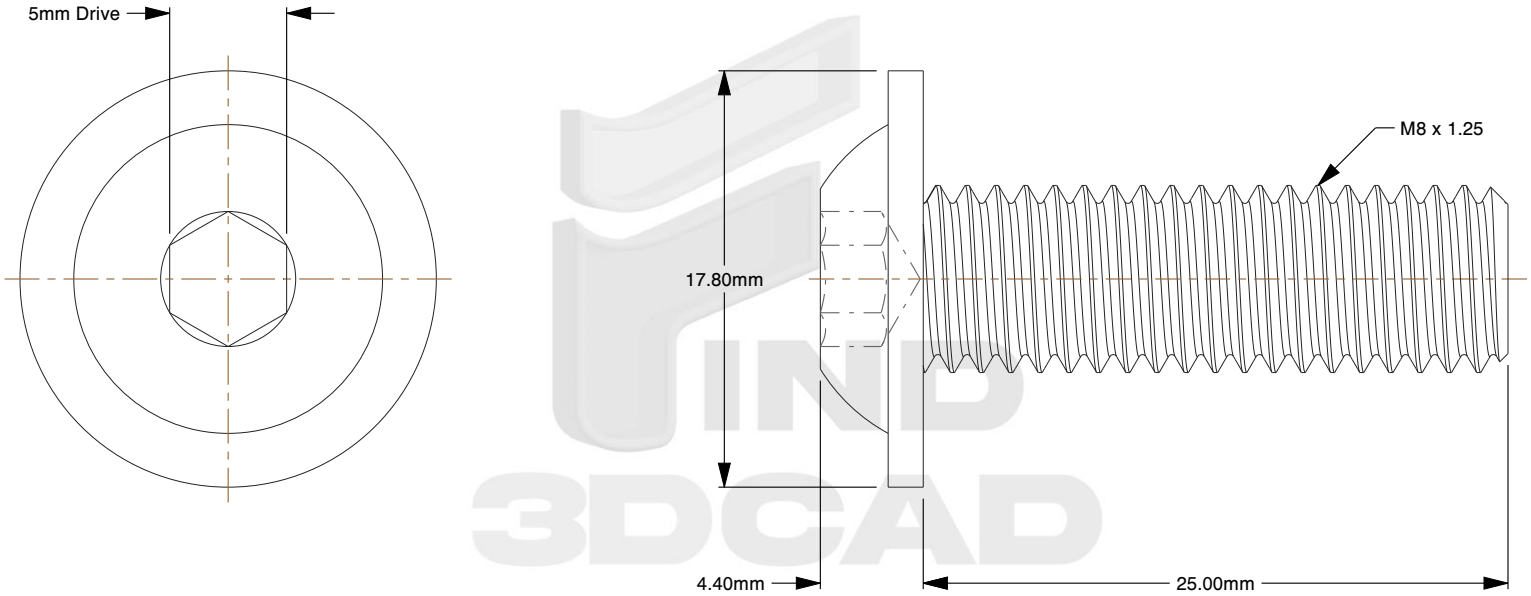

Notes:

1. **Specification:** ISO 7380-2
2. **Thread Diameter + Pitch:** M8X1.25
3. **Length:** 25mm
4. **Thread Amount:** Full Thread
5. **Threaded Length:** 25mm
6. **Unthreaded Length:** 0mm
7. **Material:** Class 10.9 Steel
8. **Finish:** Black Oxide
9. **Flange Type:** Smooth
10. **Flange Width:** 17.8mm
11. **Head Height:** 4.4mm
12. **Drive:** 5mm Allen Socket
13. **Type Screw/Bolt:** Button Flange Head
14. **Thread Direction:** Right Hand
15. **Measurement System:** Metric

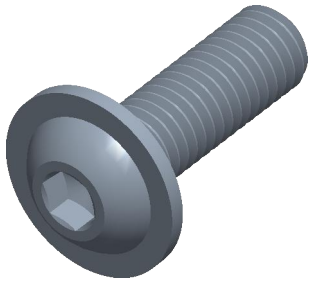

find3dcad

THIRD ANGLE PROJECTION

This file and the related information are provided for reference only and may change without notice. find3dcad does not guarantee the accuracy, completeness, or suitability of this file or the information provided. You are responsible for how you use this file and its information.

This document is the property of find3dcad. The information in it may not be copied, shared, or given to any third party without written permission from find3dcad.

TITLE	DESCRIPTION
Button Head Flange Screws	M8 Socket Button Flange Steel Class 10.9 ISO 7380-2

Sheet Size	PART NUMBER	Rev.	ISSUED
A	MIHSBHFS8X25BLK	01	2026-10-19

SCALE: 3.094	Unless otherwise specified Dimensions are in MILLIMETERS