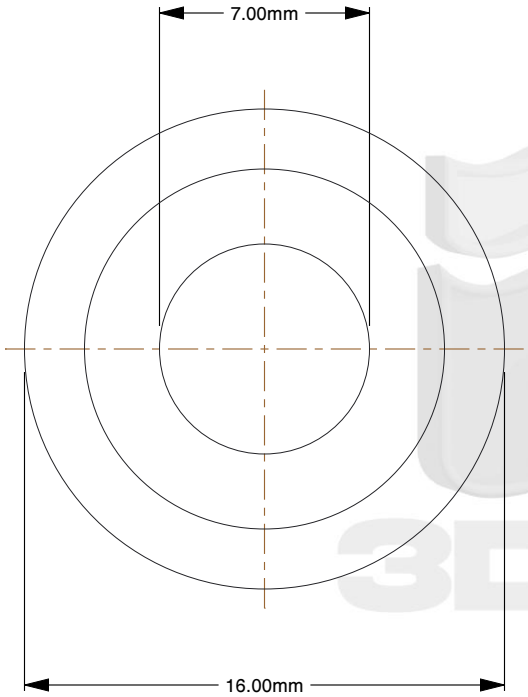

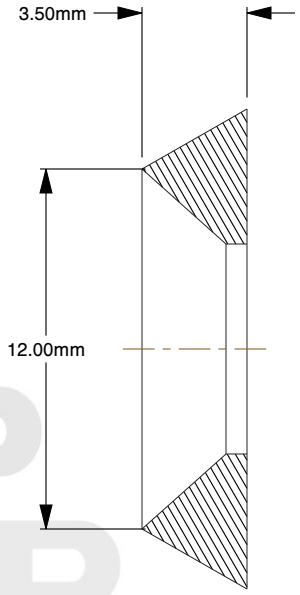

FIND 3DCAD

Notes:

1. **for screw/bolt size:** M6
2. **type:** Finish Washer
3. **washer form:** Solid Turned
4. **material:** AISI 303 Stainless Steel
5. **finish:** Black Oxide
6. **inner diameter:** 7mm
7. **outer diameter:** 16mm
8. **measurement system:** Metric
9. **washer height:** 3.5mm
10. **cup diameter:** 12mm
11. **specification:** NFE 27-619

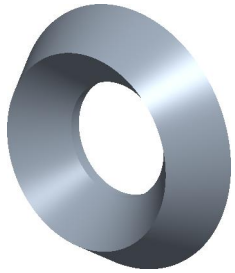

find3dcad

THIRD ANGLE PROJECTION

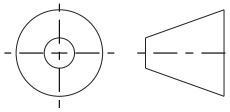

This file and the related information are provided for reference only and may change without notice. find3dcad does not guarantee the accuracy, completeness, or suitability of this file or the information provided. You are responsible for how you use this file and its information.

This document is the property of find3dcad. The information in it may not be copied, shared, or given to any third party without written permission from find3dcad.

TITLE	DESCRIPTION
Finish Washer	Finish Washer Solid Body NFE 27-619 Stainless + Black Oxide, Turned

Sheet Size	PART NUMBER	Rev.	ISSUED
A	MNFWSF6BLKSS	01	2026-10-27

SCALE: 3.969	Unless otherwise specified Dimensions are in MILLIMETERS