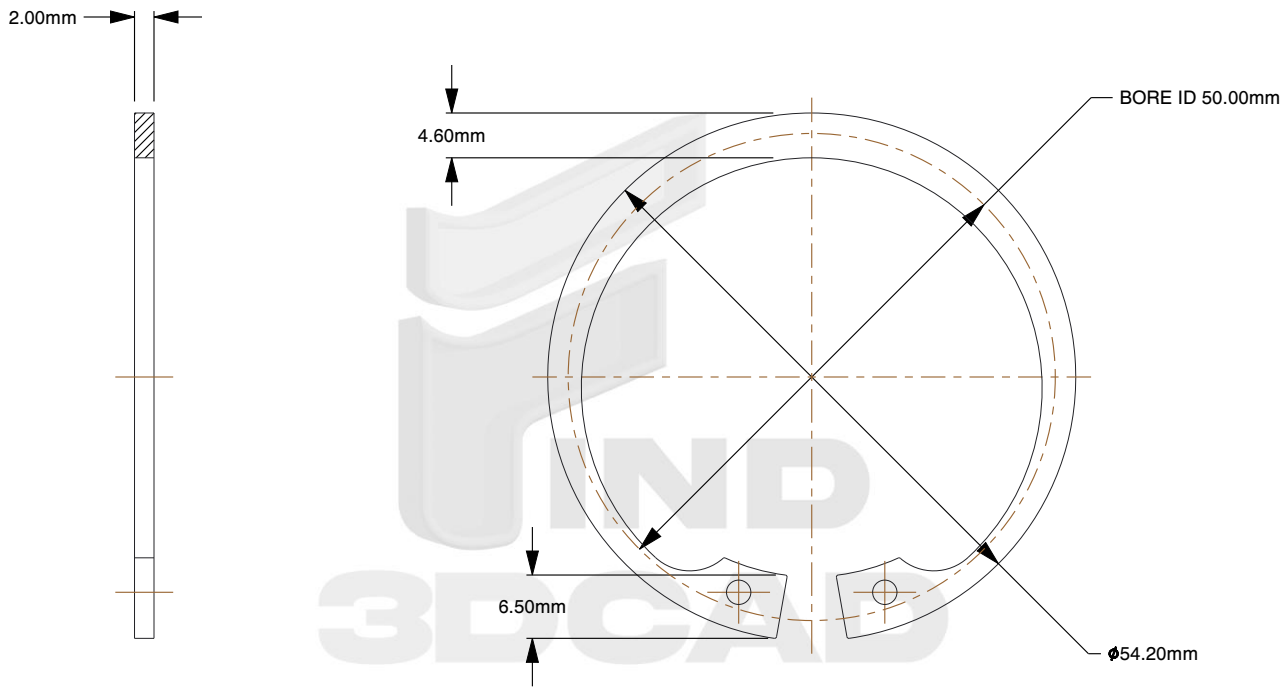

Notes:

1. **Specification:** DIN 472
2. **Material:** A1.4122 Stainless Steel
3. **Finish:** Plain
4. **Type:** Internal Retaining Ring
5. **Bore Inner Diameter:** 50mm
6. **Thickness:** 2mm
7. **Ring Width:** 4.6mm
8. **Tab Width:** 6.5mm
9. **Max Outer Diameter:** 54.2mm
10. **Minimum Inner Diameter:** 50mm
11. **Measurement System:** Metric

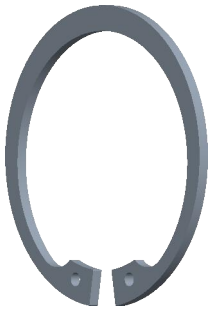

find3dcad

THIRD ANGLE PROJECTION

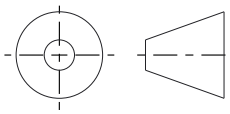

This file and the related information are provided for reference only and may change without notice. find3dcad does not guarantee the accuracy, completeness, or suitability of this file or the information provided. You are responsible for how you use this file and its information.

This document is the property of find3dcad. The information in it may not be copied, shared, or given to any third party without written permission from find3dcad.

TITLE	DESCRIPTION
Retaining Ring	M8 - M50 INTERNAL Retaining Ring 1.4122 Stainless For Bores / DIN 472

Sheet Size	PART NUMBER	Rev.	ISSUED
A	MDIRRFD50INTSS	01	2026-10-13

SCALE: 1.289	Unless otherwise specified Dimensions are in MILLIMETERS