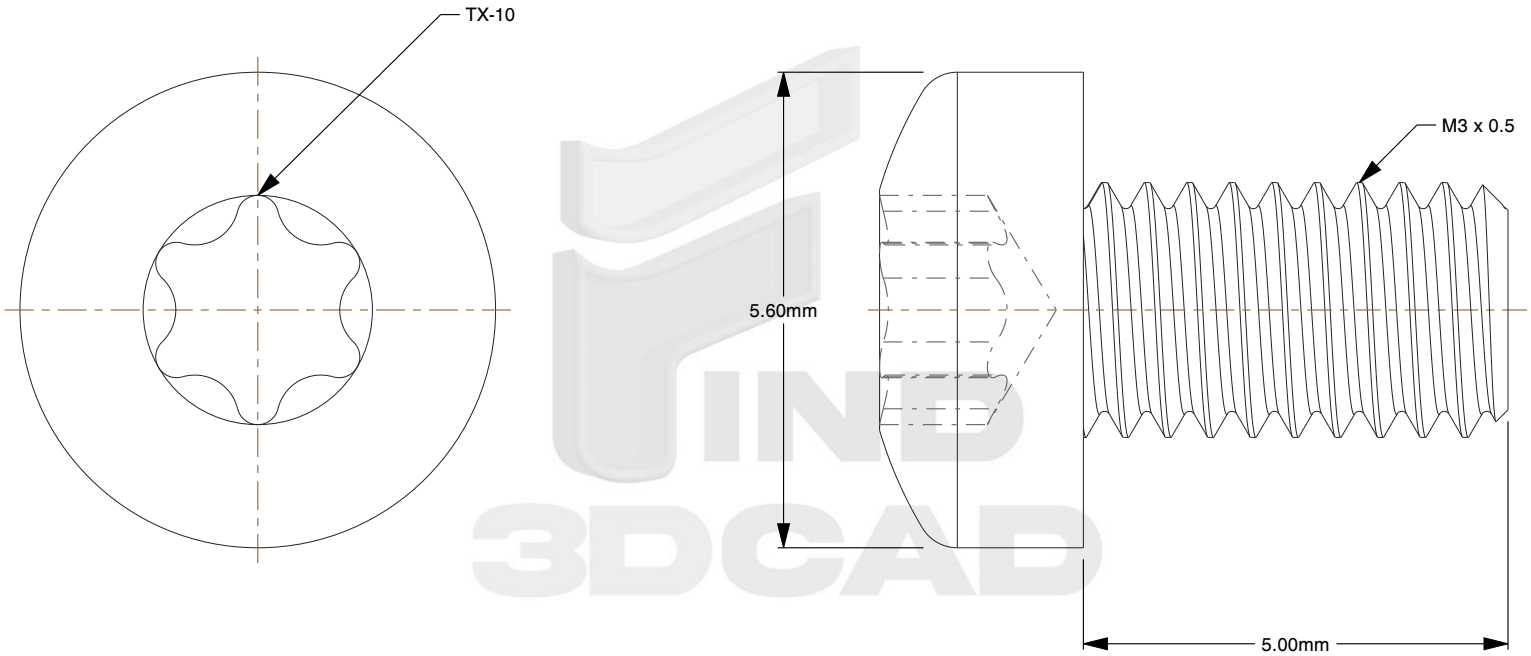

Notes:

1. **Specification:** ISO 14583
2. **Thread Diameter + Pitch:** M3X0.5
3. **Length:** 5mm
4. **Thread Amount:** Full Thread
5. **Threaded Length:** 5mm
6. **Unthreaded Length:** 0mm
7. **Material:** A2-50 Stainless Steel
8. **Finish:** Plain
9. **Head Diameter:** 5.6mm
10. **Drive:** T10 Torx Socket
11. **Type Screw/Bolt:** Pan Head Machine
12. **Thread Direction:** Right Hand
13. **Measurement System:** Metric

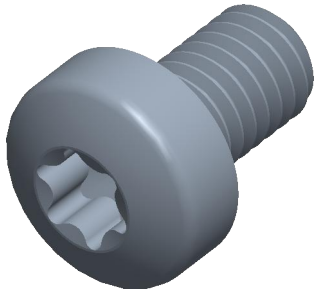

find3dcad

THIRD ANGLE PROJECTION

This file and the related information are provided for reference only and may change without notice. find3dcad does not guarantee the accuracy, completeness, or suitability of this file or the information provided. You are responsible for how you use this file and its information.

This document is the property of find3dcad. The information in it may not be copied, shared, or given to any third party without written permission from find3dcad.

TITLE	DESCRIPTION
Pan Head Screws	M3X0.5 Torx Pan Head Stainless Steel A2 ISO 14583

Sheet Size	PART NUMBER	Rev.	ISSUED
A	MITPHS3X5SS	01	2026-10-19

SCALE: 11.235

Unless otherwise specified Dimensions are in MILLIMETERS