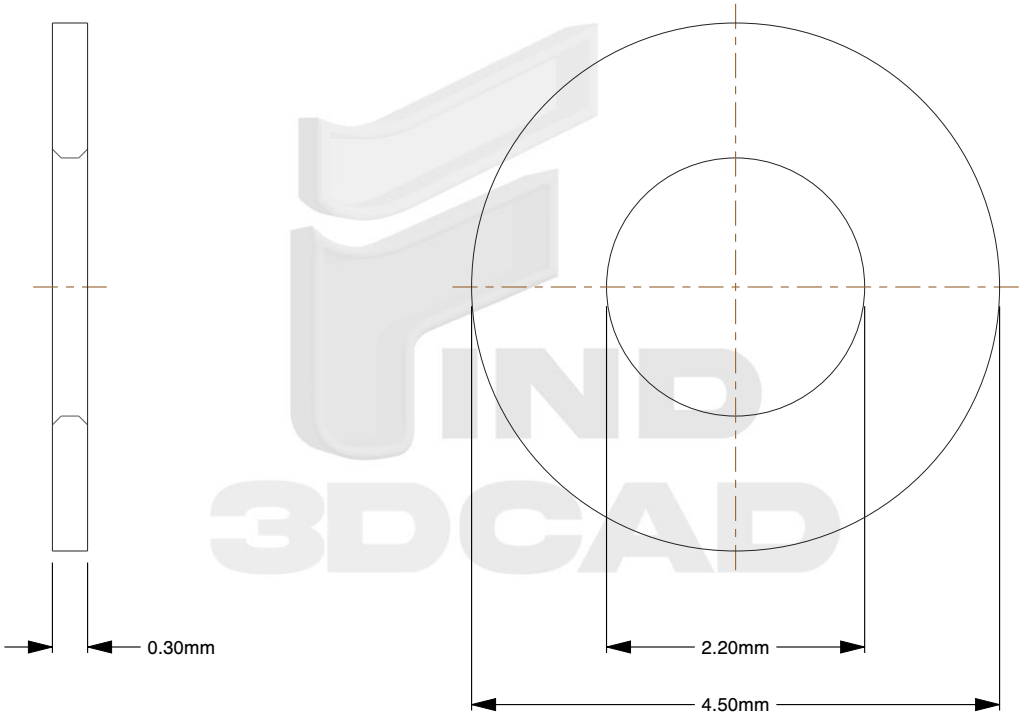

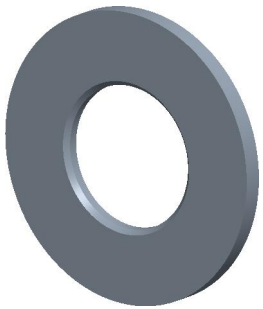

Notes:

1. **For Screw/Bolt Size:** M2
2. **Type:** Flat Washer
3. **Form:** Reduced Outer Diameter
4. **Material:** A4 HV 200 Stainless Steel
5. **Finish:** Plain
6. **Thickness:** 0.3mm
7. **Inner Diameter:** 2.2mm
8. **Outer Diameter:** 4.5mm
9. **Measurement System:** Metric
10. **Specification:** ISO 7092

find3dcad

THIRD ANGLE PROJECTION

This file and the related information are provided for reference only and may change without notice. find3dcad does not guarantee the accuracy, completeness, or suitability of this file or the information provided. You are responsible for how you use this file and its information.

This document is the property of find3dcad. The information in it may not be copied, shared, or given to any third party without written permission from find3dcad.

TITLE	DESCRIPTION
Flat Washer	Flat Small O.D. Hardened A4 Stainless 200 HV ISO 7092

Sheet Size	PART NUMBER	Rev.	ISSUED
A	MIFWSOD2X4-5SSA4	01	2026-10-13

SCALE: 15.522	Unless otherwise specified Dimensions are in