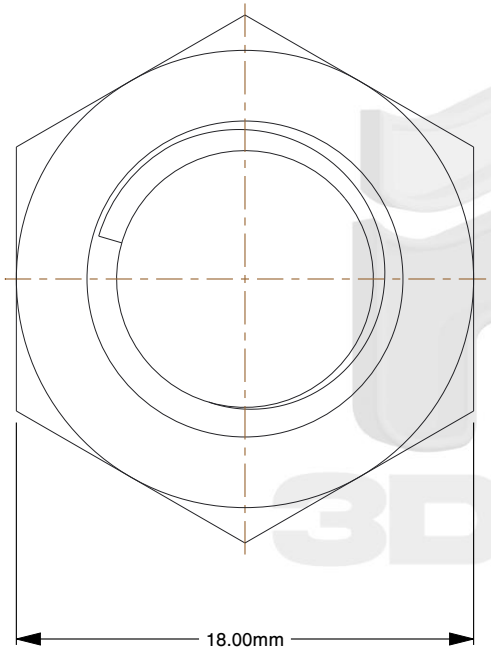

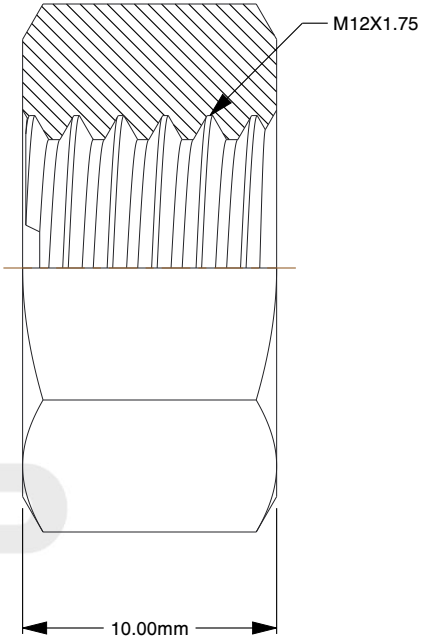

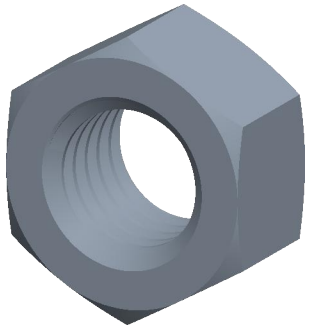

Notes:

1. **Thread Diameter:** M12X1.75
2. **Thread Direction:** Right Hand
3. **Type:** Hex Nut
4. **Material:** Class 12 Steel
5. **Finish:** Zinc Flake
6. **Drive:** 18mm Wrench
7. **Height:** 10mm
8. **Measurement System:** Metric
9. **Specification:** ISO 4032

find3dcad

THIRD ANGLE PROJECTION

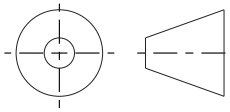

This file and the related information are provided for reference only and may change without notice. find3dcad does not guarantee the accuracy, completeness, or suitability of this file or the information provided. You are responsible for how you use this file and its information.

This document is the property of find3dcad. The information in it may not be copied, shared, or given to any third party without written permission from find3dcad.

TITLE	DESCRIPTION
Hex Nuts	ASME B18.2.2 Domestic Grade-2 Finished Hex Nuts

Sheet Size	PART NUMBER	Rev.	ISSUED
A	MICN12X18ZFL	01	2026-10-13

SCALE: 3.361	Unless otherwise specified Dimensions are in MILLIMETERS