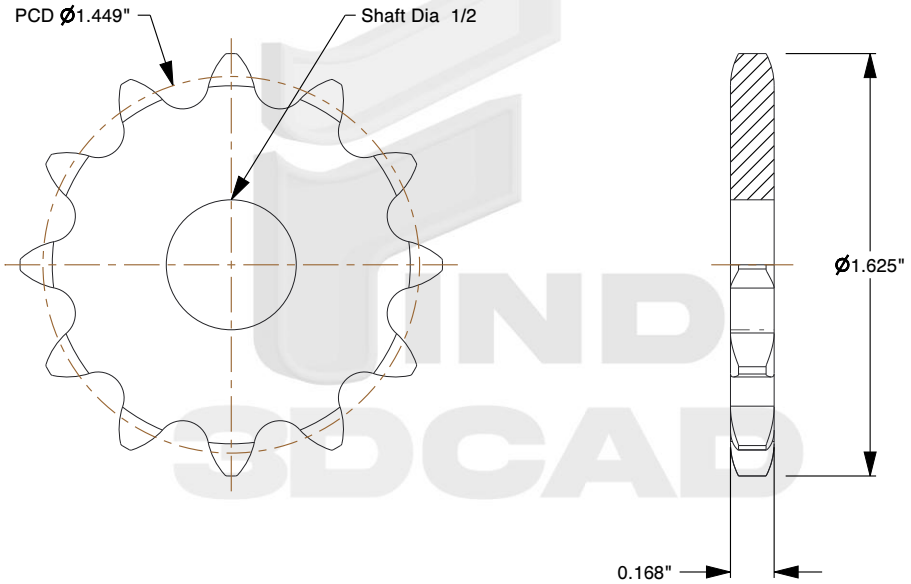



1. **ANSI Chain Size:** 35
2. **Bore:** 1/2"
3. **Tooth Count:** 12
4. **Pitch Diameter (PD):** 1.449"
5. **Outsisde Diameter (D):** 1.625"
6. **Sprocket Thickness (T):** 0.168"
7. **Material:** 1045CD
8. **Hardened Teeth:** Yes [HRC 40-50]
9. **Type of Finish:** Black Oxide

find3dcad	THIRD ANGLE PROJECTION
This file and the related information are provided for reference only and may change without notice. find3dcad does not guarantee the accuracy, completeness, or suitability of this file or the information provided. You are responsible for how you use this file and its information.	This document is the property of find3dcad. The information in it may not be copied, shared, or given to any third party without written permission from find3dcad.
DESCRIPTION 35A12 Type A Plate Sprocket 1/2" Bore	TITLE Flat Sprockets

Sheet Size	PART NUMBER	Rev.	ISSUED
A	35A12	01	2026-10-16

SCALE: 1.354	Unless otherwise specified Dimensions are in INCHES