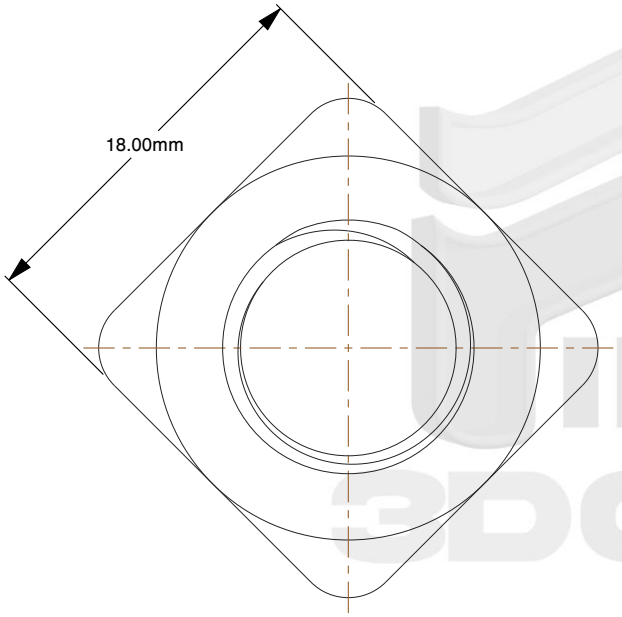

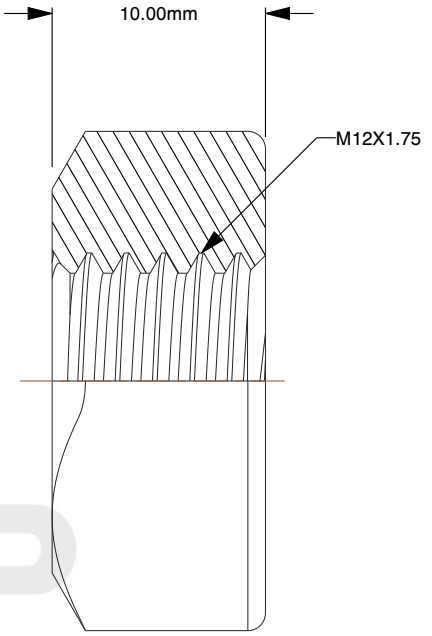

FIND 3DCAD

Notes:

1. **Thread Diameter + Pitch:** M12X1.75
2. **Thread Direction:** Right Hand
3. **Type:** Square Nut
4. **Material:** A2-70 Stainless Steel
5. **Finish:** Plain
6. **Drive:** Square
7. **Profile:** Normal
8. **Height:** 10mm
9. **Length:** 18mm
10. **Width:** 18mm
11. **Measurement System:** Metric
12. **Specification:** DIN 557

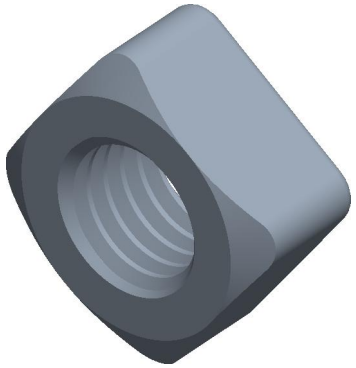

find3dcad

THIRD ANGLE PROJECTION

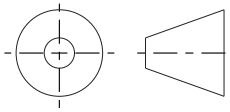

This file and the related information are provided for reference only and may change without notice. find3dcad does not guarantee the accuracy, completeness, or suitability of this file or the information provided. You are responsible for how you use this file and its information.

This document is the property of find3dcad. The information in it may not be copied, shared, or given to any third party without written permission from find3dcad.

TITLE	DESCRIPTION
Square Nuts	Square Nut Stainless Steel A2 DIN 557

Sheet Size	PART NUMBER	Rev.	ISSUED
A	MDSQN12SS	01	2026-10-16

SCALE: 2.822	Unless otherwise specified Dimensions are in MILLIMETERS