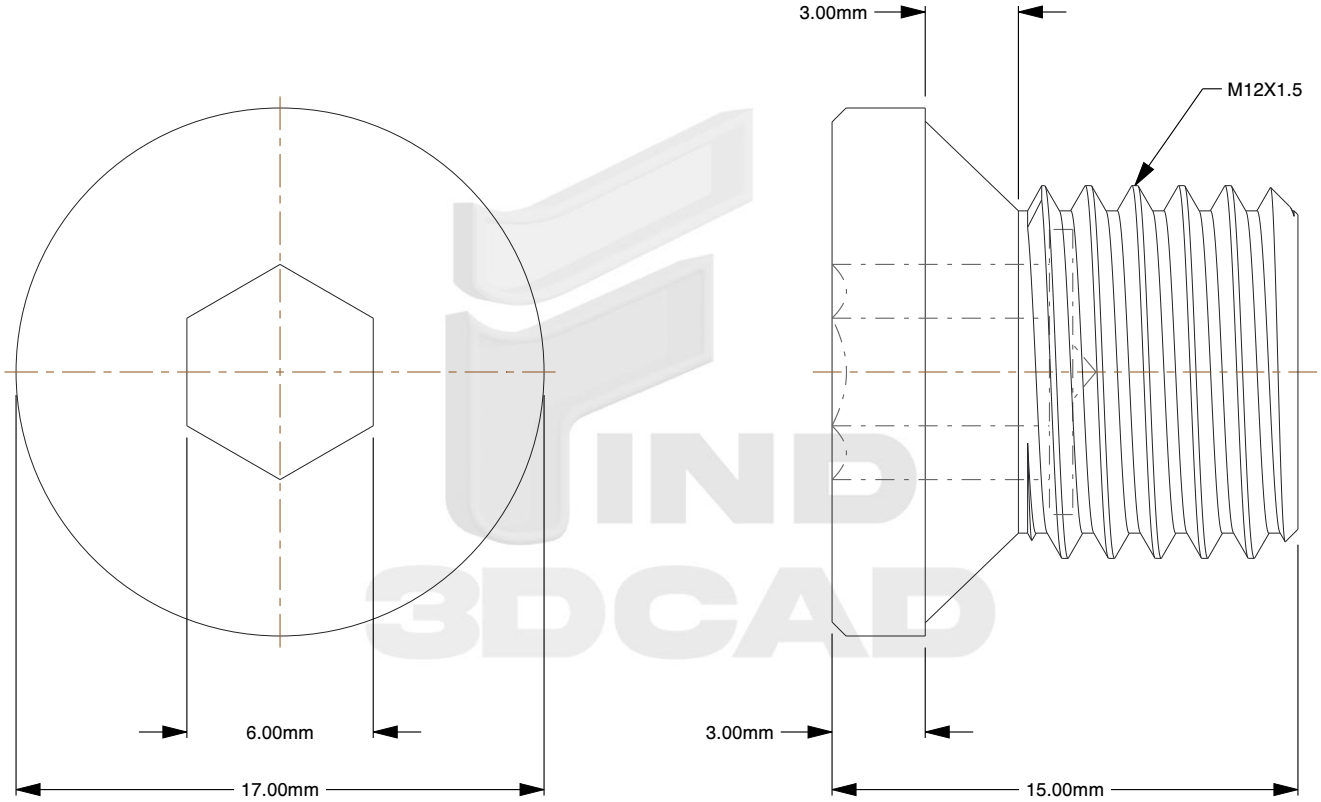

Notes:

1. **Thread Diameter + Pitch:** M12X1.5
2. **Thread Direction:** Right Hand
3. **Type:** Allen Socket Drain Plug
4. **Material:** A2-50 Stainless Steel
5. **Finish:** Plain
6. **Type DP Thread:** Straight
7. **Overall Length:** 15mm
8. **Drive:** 6mm Allen Socket
9. **Head Height:** 3mm
10. **Flange Type:** Smooth
11. **Flange Width:** 17mm
12. **Taper Seat Height:** 3mm
13. **Specification:** DIN 908

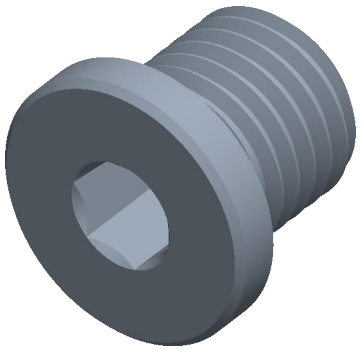

find3dcad

THIRD ANGLE PROJECTION

This file and the related information are provided for reference only and may change without notice. find3dcad does not guarantee the accuracy, completeness, or suitability of this file or the information provided. You are responsible for how you use this file and its information.

This document is the property of find3dcad. The information in it may not be copied, shared, or given to any third party without written permission from find3dcad.

TITLE	DESCRIPTION
Allen Socket Drain Plug	Flanged Allen Socket Plug Stainless Steel DIN 908

Sheet Size	PART NUMBER	Rev.	ISSUED
A	MDASDP12X1-5AHSS	01	2026-10-16

SCALE: 4.109	Unless otherwise specified Dimensions are in MILLIMETERS