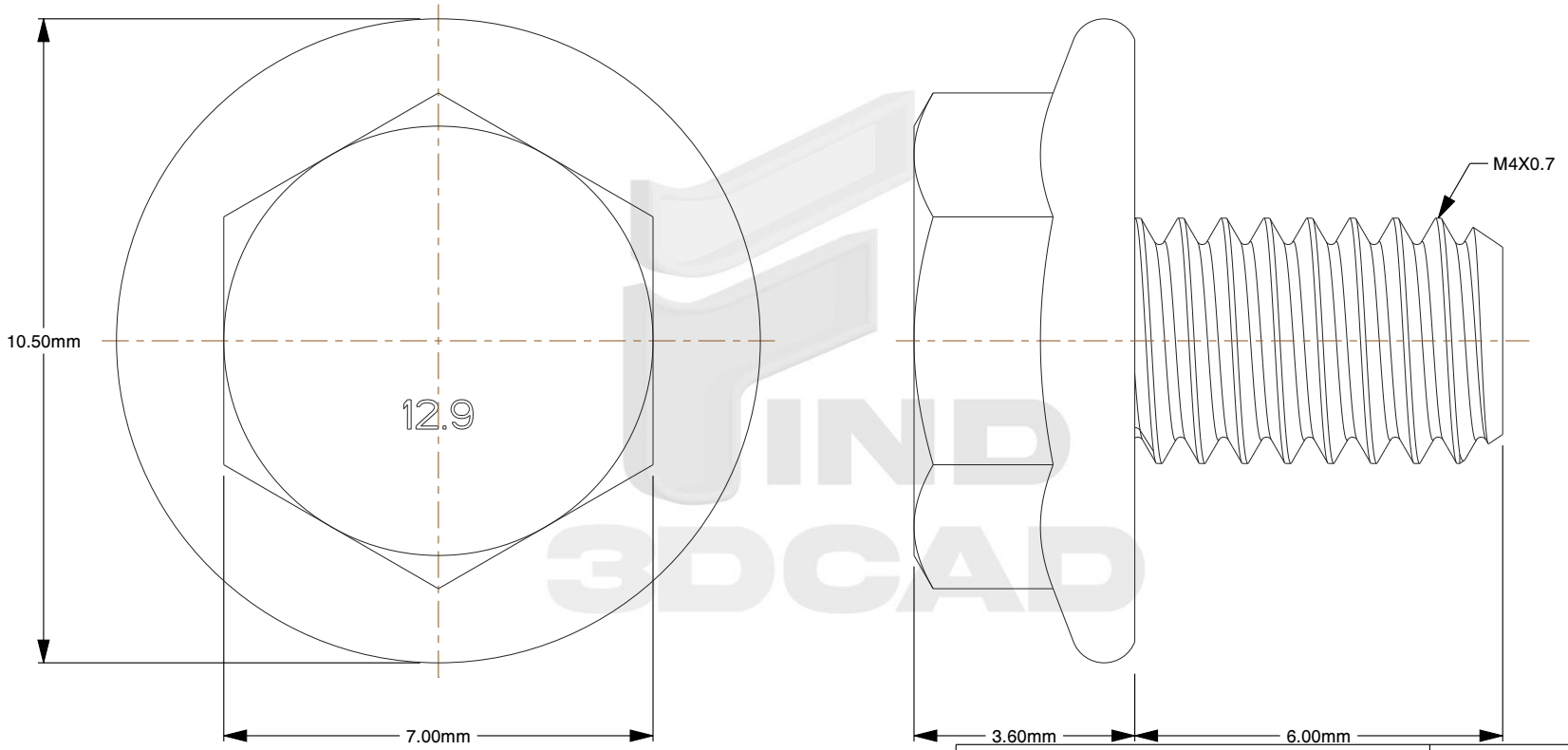


Notes:

1. **Specification:** DIN 6921
2. **Thread Diameter + Pitch:** M4X0.7
3. **Length:** 6mm
4. **Thread Amount:** Full Thread
5. **Threaded Length:** 6mm
6. **Unthreaded Length:** 0mm
7. **Material:** Stainless Steel
8. **Finish:** Plain
9. **Flange Type:** Smooth
10. **Flange Width:** 10.5mm
11. **Head Height:** 3.6mm
12. **Drive:** 7mm Wrench
13. **Type Screw/Bolt:** Hex Flange Head
14. **Thread Direction:** Right Hand
15. **Measurement System:** Metric




THIRD ANGLE PROJECTION

This file and the related information are provided for reference only and may change without notice. find3dcad does not guarantee the accuracy, completeness, or suitability of this file or the information provided. You are responsible for how you use this file and its information.

This document is the property of find3dcad. The information in it may not be copied, shared, or given to any third party without written permission from find3dcad.

| TITLE | PART NUMBER |
|---|---|
| Hex Flange Bolts | MDHFB4X6SS |

| PART NUMBER | DESCRIPTION |
|---|---|
| MDHFB4X6SS | M4X0.7 Flange Bolt<br>A2 Stainless Steel<br>DIN 6921 / 7mm Wrench |

| Sheet Size | Design Code | Drawing No. | Rev. | ISSUED |
|---|---|---|---|---|
| A | 001 | 10001 | 01 | 2026-10-13 |

SCALE: 8.547

Unless otherwise specified Dimensions are in INCHES