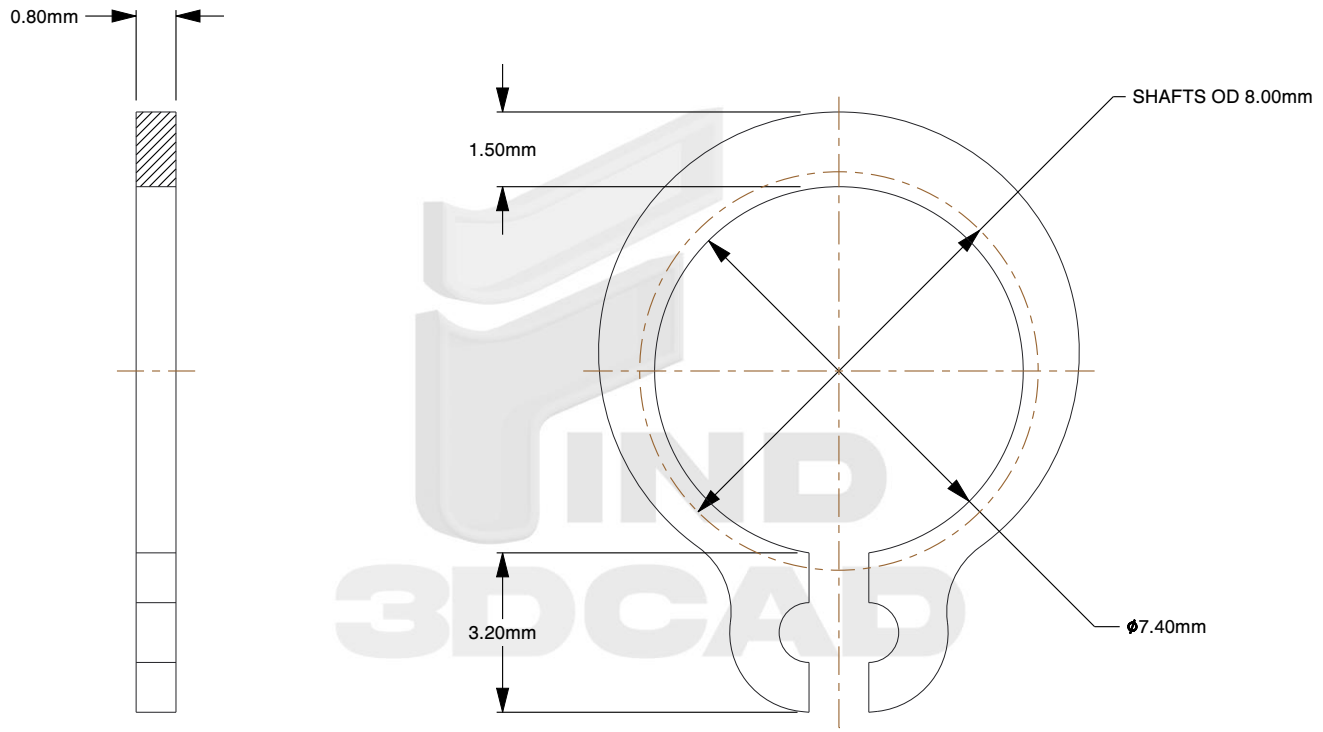

Notes:

1. **Specification:** DIN 471
2. **Material:** A1.4122 Stainless Steel
3. **Finish:** Plain
4. **Type:** External Retaining Ring
5. **Shaft Outer Diameter:** 8mm
6. **Thickness:** 0.8mm
7. **Ring Width:** 1.5mm
8. **Tab Width:** 3.2mm
9. **Max Outer Diameter:** 8mm
10. **Minimum Inner Diameter:** 7.4mm
11. **Measurement System:** Metric

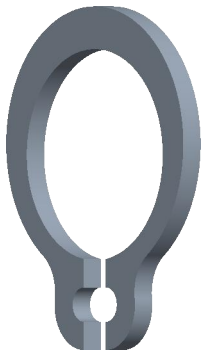

find3dcad

THIRD ANGLE PROJECTION

This file and the related information are provided for reference only and may change without notice. find3dcad does not guarantee the accuracy, completeness, or suitability of this file or the information provided. You are responsible for how you use this file and its information.

This document is the property of find3dcad. The information in it may not be copied, shared, or given to any third party without written permission from find3dcad.

TITLE	DESCRIPTION
External Retaining Ring	M3 - M50 EXTERNAL Retaining Ring A1.4122 Stainless For Shafts / DIN 471

Sheet Size	PART NUMBER	Rev.	ISSUED
A	MDERRFA8EXTSS	01	2026-10-19

SCALE: 6.590

Unless otherwise specified Dimensions are in MILLIMETERS