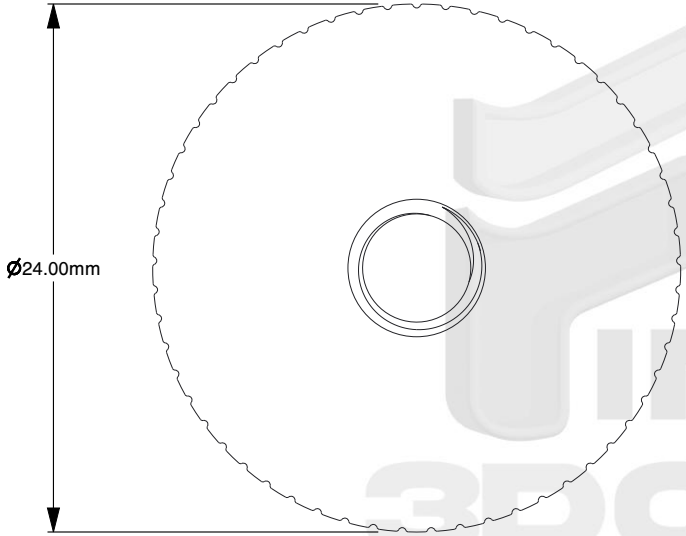

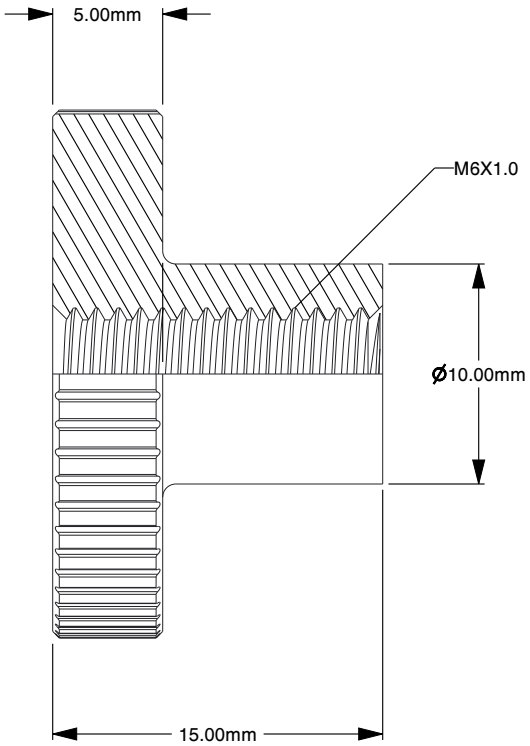

Notes:

1. **Thread Diameter + Pitch:** M6X1.0
2. **Thread Direction:** Right Hand
3. **Type:** Thumb Nut
4. **Material:** A1-50 Stainless Steel
5. **Finish:** Plain
6. **Profile:** Normal
7. **Height:** 15mm
8. **Head Diameter:** 24mm
9. **Head Height:** 5mm
10. **Outside Barrel Diameter:** 10mm
11. **Barrel Length:** 10mm
12. **Measurement System:** Metric
13. **Specification:** DIN 466

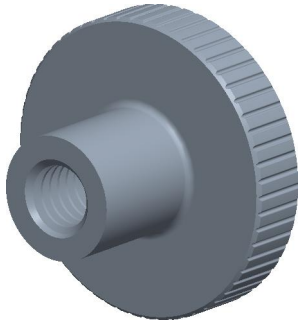

find3dcad

THIRD ANGLE PROJECTION

This file and the related information are provided for reference only and may change without notice. find3dcad does not guarantee the accuracy, completeness, or suitability of this file or the information provided. You are responsible for how you use this file and its information.

This document is the property of find3dcad. The information in it may not be copied, shared, or given to any third party without written permission from find3dcad.

TITLE	DESCRIPTION
	Knurled Thumb Nut Stainless Steel High Collar DIN 466

Sheet Size	PART NUMBER	Rev.	ISSUED
A	MDTN6SS	01	2026-10-13

SCALE: 2.910	Unless otherwise specified Dimensions are in MILLIMETERS