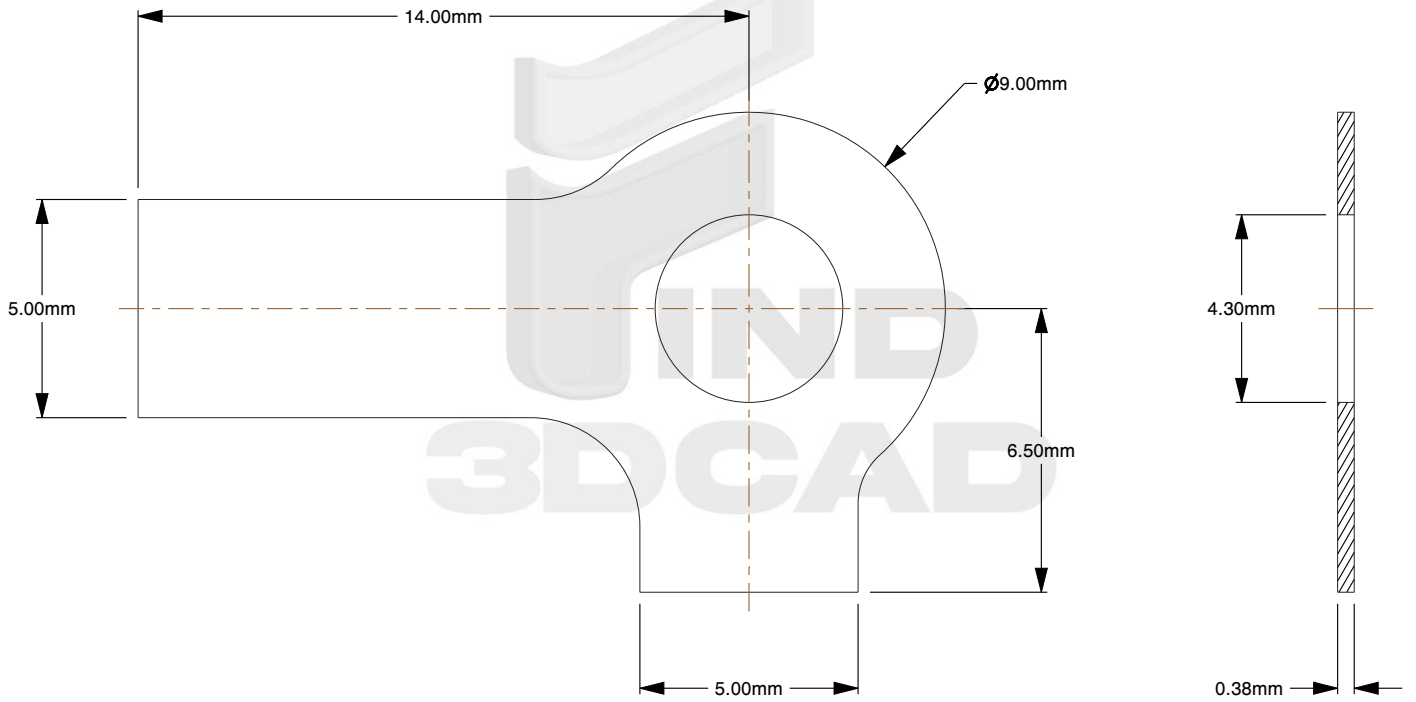

Notes:

1. **For Screw/Bolt Size:** M4
2. **Type:** Tab Washer
3. **Form:** Double Tab
4. **Material:** A2 Stainless Steel
5. **Finish:** Plain
6. **Thickness:** 0.38mm
7. **Inner Diameter:** 4.3mm
8. **Outer Diameter:** 9mm
9. **Measurement System:** Metric
10. **Tab Width:** 5mm
11. **Center Hole to Long lab:** 14mm
12. **Center Hole to Short Tab:** 6.5mm
13. **Specification:** DIN 463

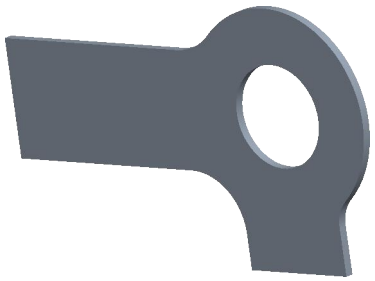

find3dcad

THIRD ANGLE PROJECTION

This file and the related information are provided for reference only and may change without notice. find3dcad does not guarantee the accuracy, completeness, or suitability of this file or the information provided. You are responsible for how you use this file and its information.

This document is the property of find3dcad. The information in it may not be copied, shared, or given to any third party without written permission from find3dcad.

TITLE	DESCRIPTION
Tab Washer	Washer + Double Tab Stainless Steel DIN 463

Sheet Size	PART NUMBER	Rev.	ISSUED
A	MDDTW4DBLSS	01	2026-10-20

SCALE: 5.773

Unless otherwise specified Dimensions are in MILLIMETERS