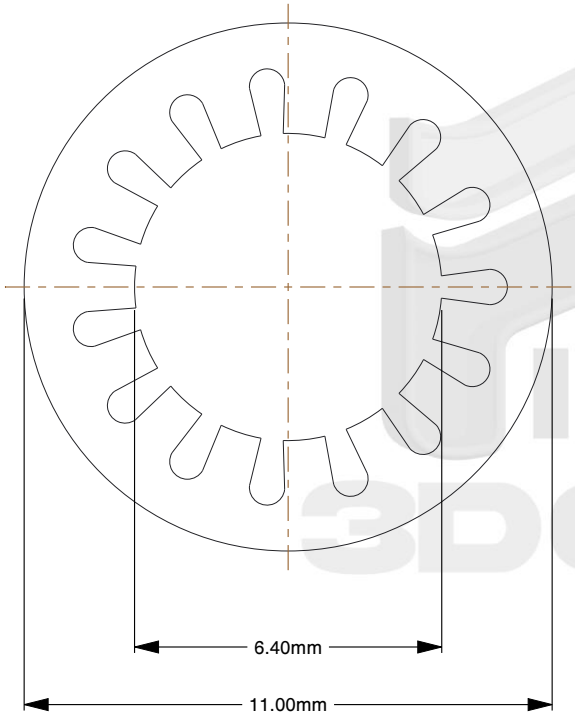


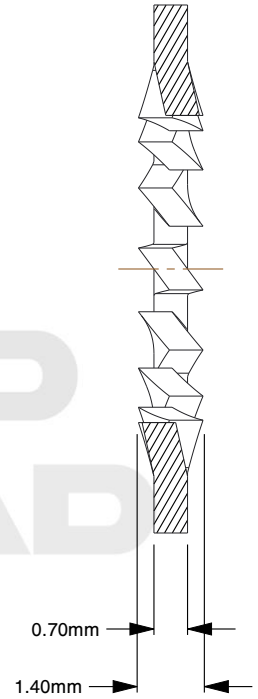


FIND 3DCAD

Notes:

1. **For Screw/Bolt Size:** M6
2. **Type:** Star Washer
3. **Form:** Form J
4. **Material:** A2 Stainless Steel
5. **Finish:** Plain
6. **Thickness:** 0.7mm
7. **Inner Diameter:** 6.4mm
8. **Outer Diameter:** 11mm
9. **Measurement System:** Metric
10. **Height:** 1.4mm
11. **Specification:** DIN 6797-I/J

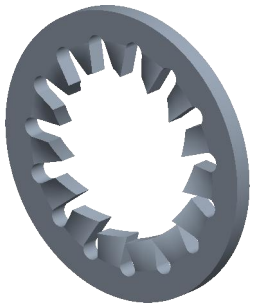

find3dcad

THIRD ANGLE PROJECTION

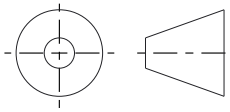

This file and the related information are provided for reference only and may change without notice. find3dcad does not guarantee the accuracy, completeness, or suitability of this file or the information provided. You are responsible for how you use this file and its information.

This document is the property of find3dcad. The information in it may not be copied, shared, or given to any third party without written permission from find3dcad.

| TITLE | DESCRIPTION |
|---|---|
| Star Washer | Toothed Star Lock Washer<br>Internal DIN 6797-J<br>Stainless Steel |

| Sheet Size | PART NUMBER | Rev. | ISSUED |
|---|---|---|---|
| A | MDTLWFJ6SS | 01 | 2026-10-13 |

| SCALE: 6.350 | Unless otherwise specified Dimensions are in MILLIMETERS |
|---|---|