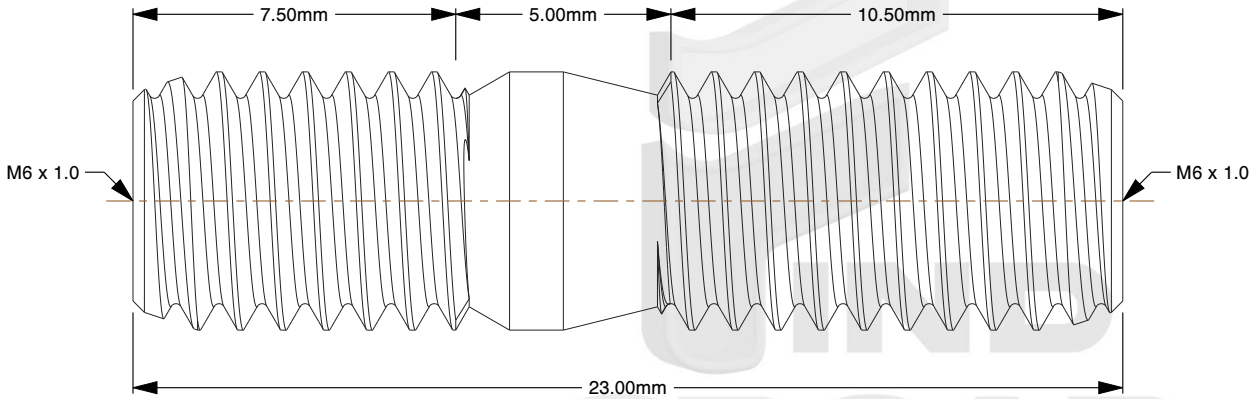

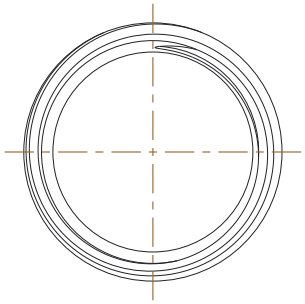

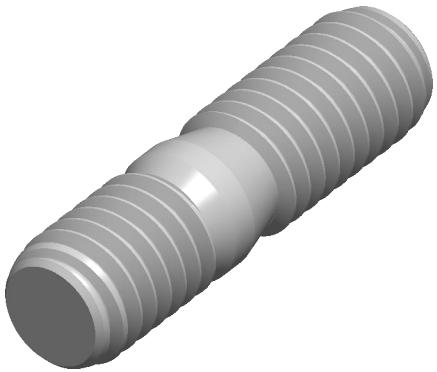

Notes:

1. **Specification:** DIN 939
2. **Thread Diameter + Pitch:** M6X1.0
3. **Overall Length:** 23mm
4. **Longer Thread Length:** 10.5mm
5. **Middle Shank Length:** 5mm
6. **Shorter Thread Length:** 7.5mm
7. **Material:** A2-50 Stainless Steel
8. **Finish:** Plain
9. **Type Studs/Rods:** Offset Double End Stud
10. **Thread Direction:** Right Hand
11. **Measurement System:** Metric

find3dcad

THIRD ANGLE PROJECTION

This file and the related information are provided for reference only and may change without notice. find3dcad does not guarantee the accuracy, completeness, or suitability of this file or the information provided. You are responsible for how you use this file and its information.

This document is the property of find3dcad. The information in it may not be copied, shared, or given to any third party without written permission from find3dcad.

TITLE	DESCRIPTION
Offset Double End Stud	M6X1.0 Double End Stud Stainless Steel A2 DIN 939

Sheet Size	PART NUMBER	Rev.	ISSUED
A	MDDS125D6X23DSS	01	2026-10-20

SCALE: 0.224	Unless otherwise specified Dimensions are in MILLIMETERS