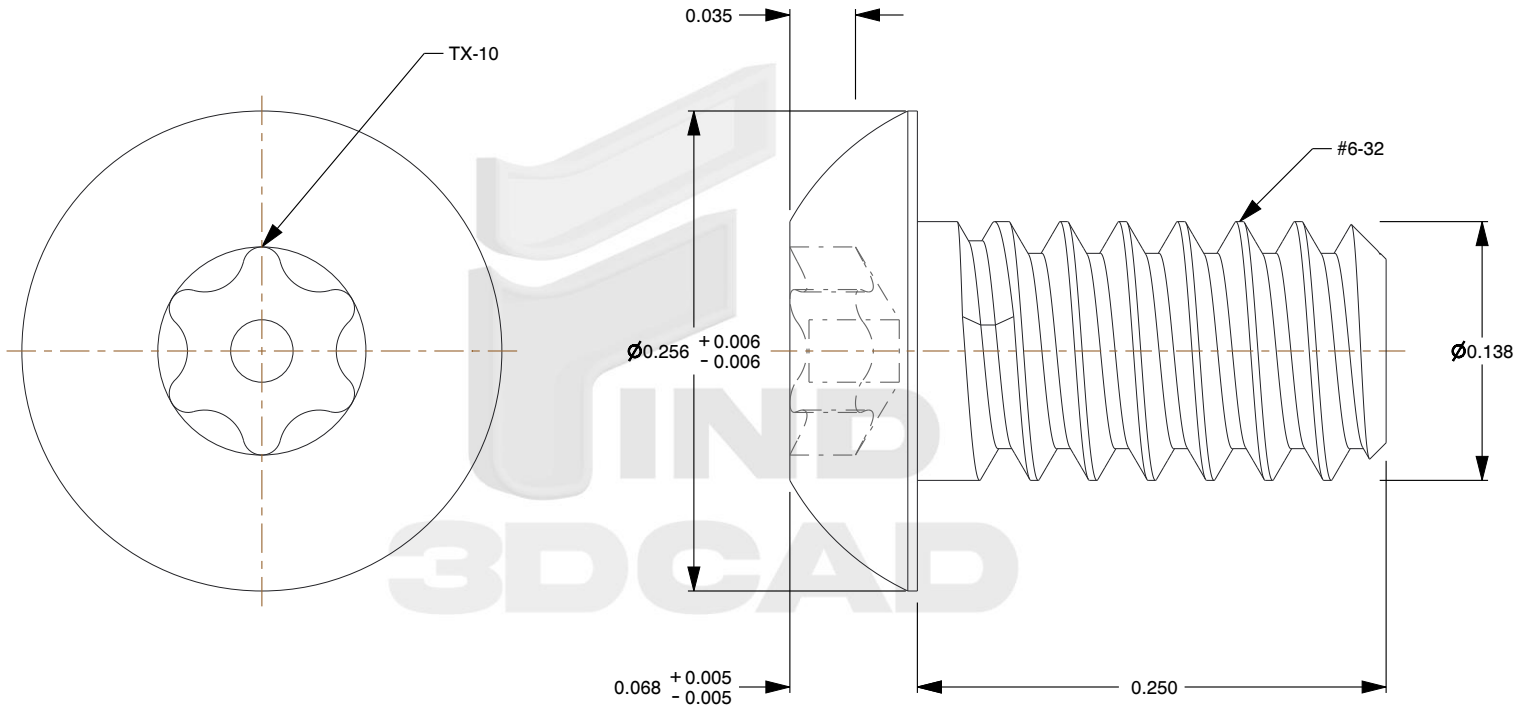

Notes:

1. **Category:** Socket Head Cap Screws
2. **System of Measurement:** Inch
3. **Head Style:** Button Head
4. **Drive Style:** Tamper-Resistant 6Lobe Pin Drive
5. **Drive Detail:** Torx(r) Generic Alternative
6. **Thread Length:** Full Thread
7. **Thread Direction:** Right-Hand Thread
8. **Material:** Stainless Steel
9. **Material Grade:** 18-8 Stainless Steel
10. **Coating:** Uncoated

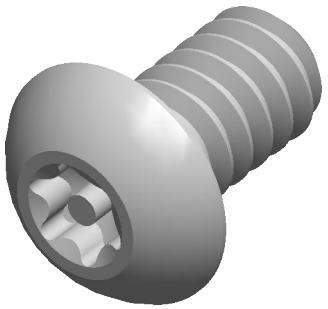

find3dcad

THIRD ANGLE PROJECTION

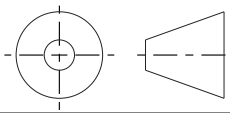

This file and the related information are provided for reference only and may change without notice. find3dcad does not guarantee the accuracy, completeness, or suitability of this file or the information provided. You are responsible for how you use this file and its information.

This document is the property of find3dcad. The information in it may not be copied, shared, or given to any third party without written permission from find3dcad.

DESCRIPTION

#6-32 X 1/4" Machine Screws,
Button Head Tamper-Resistant
6Lobe Torx(r) Pin Drive,
Stainless Steel

TITLE

Cap Screws

Sheet Size	PART NUMBER	Rev.	ISSUED
A	297-632X14	01	2026-10-13

SCALE: 9.766

Unless otherwise specified Dimensions are in INCHES