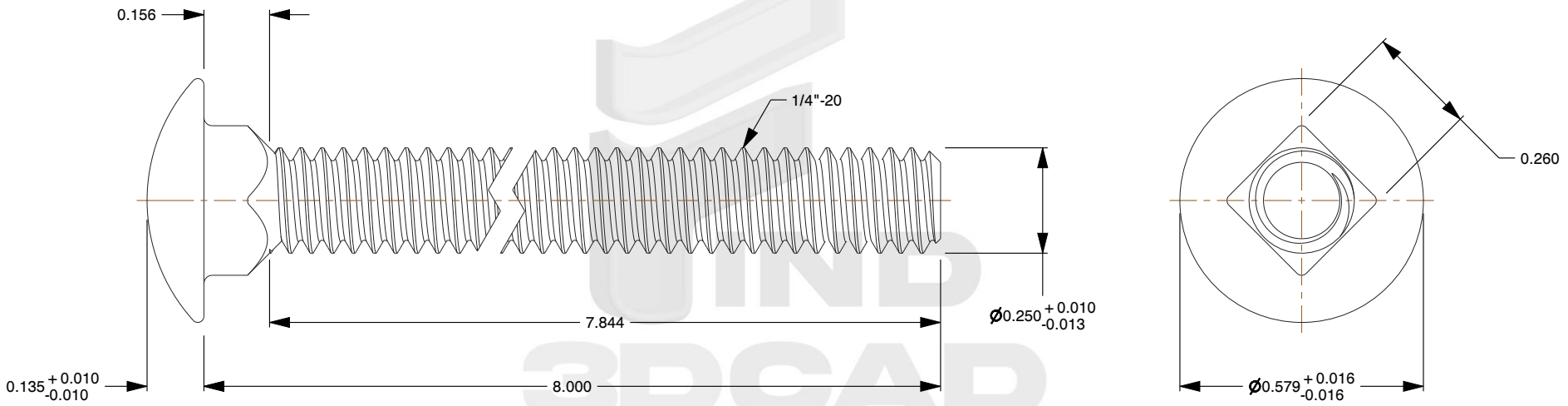

Notes:

1. **Category:** Carriage Bolts
2. **System of Measurement:** Inch
3. **Head Style:** Round Head
4. **Head Style Detail:** Square Neck
5. **Head Markings:** Three radial lines 120 degrees apart and manufacturer ID
6. **Thread Length:** Full Thread
7. **Thread Direction:** Right-Hand Thread
8. **Material:** Steel
9. **Material Grade:** Grade 5 Steel
10. **Coating:** Zinc Plated
11. **Coating Color:** Clear

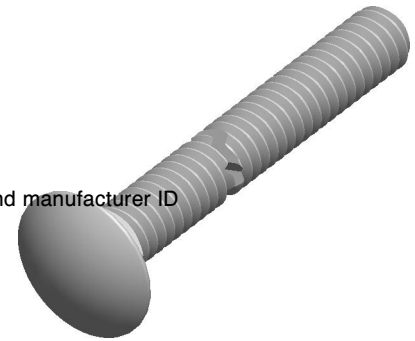

find3dcad

THIRD ANGLE PROJECTION

This file and the related information are provided for reference only and may change without notice. find3dcad does not guarantee the accuracy, completeness, or suitability of this file or the information provided. You are responsible for how you use this file and its information.

This document is the property of find3dcad. The information in it may not be copied, shared, or given to any third party without written permission from find3dcad.

TITLE	DESCRIPTION
Carriage Bolts	1/4"-20 X 8" Carriage Bolts, Round Head, Square Neck, Full Thread, Grade 5 Steel, Zinc

Sheet Size	PART NUMBER	Rev.	ISSUED
A	IARSQB004-1420X8X8	01	2026-10-13

SCALE: 2.639	Unless otherwise specified Dimensions are in INCHES