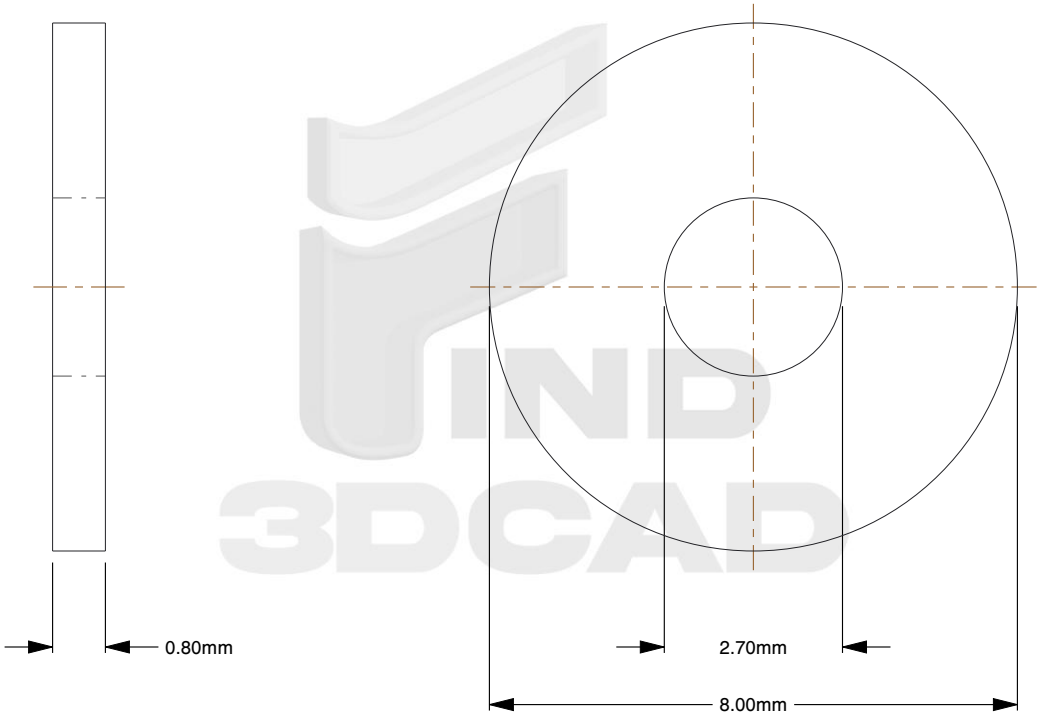

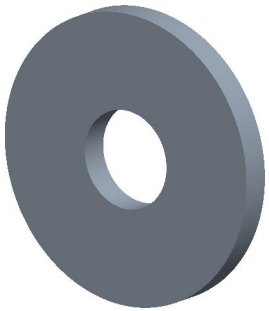

Notes:

1. **For Screw/Bolt Size:** M2.5
2. **Type:** Fender Washer
3. **Form:** Oversized Outer Diameter
4. **Material:** A2 Stainless Steel
5. **Finish:** Plain
6. **Thickness:** 0.8mm
7. **Inner Diameter:** 2.7mm
8. **Outer Diameter:** 8mm
9. **Measurement System:** Metric
10. **Specification:** DIN 9021

find3dcad

THIRD ANGLE PROJECTION

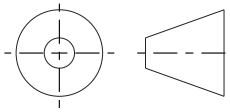

This file and the related information are provided for reference only and may change without notice. find3dcad does not guarantee the accuracy, completeness, or suitability of this file or the information provided. You are responsible for how you use this file and its information.

This document is the property of find3dcad. The information in it may not be copied, shared, or given to any third party without written permission from find3dcad.

TITLE	DESCRIPTION
Fender Washer	Fender Washer DIN 9021 A2 Stainless HV 140 3X Inner Diameter

Sheet Size	PART NUMBER	Rev.	ISSUED
A	MDFWO22-5X8SS	01	2026-10-13

SCALE: 8.731	Unless otherwise specified Dimensions are in MILLIMETERS