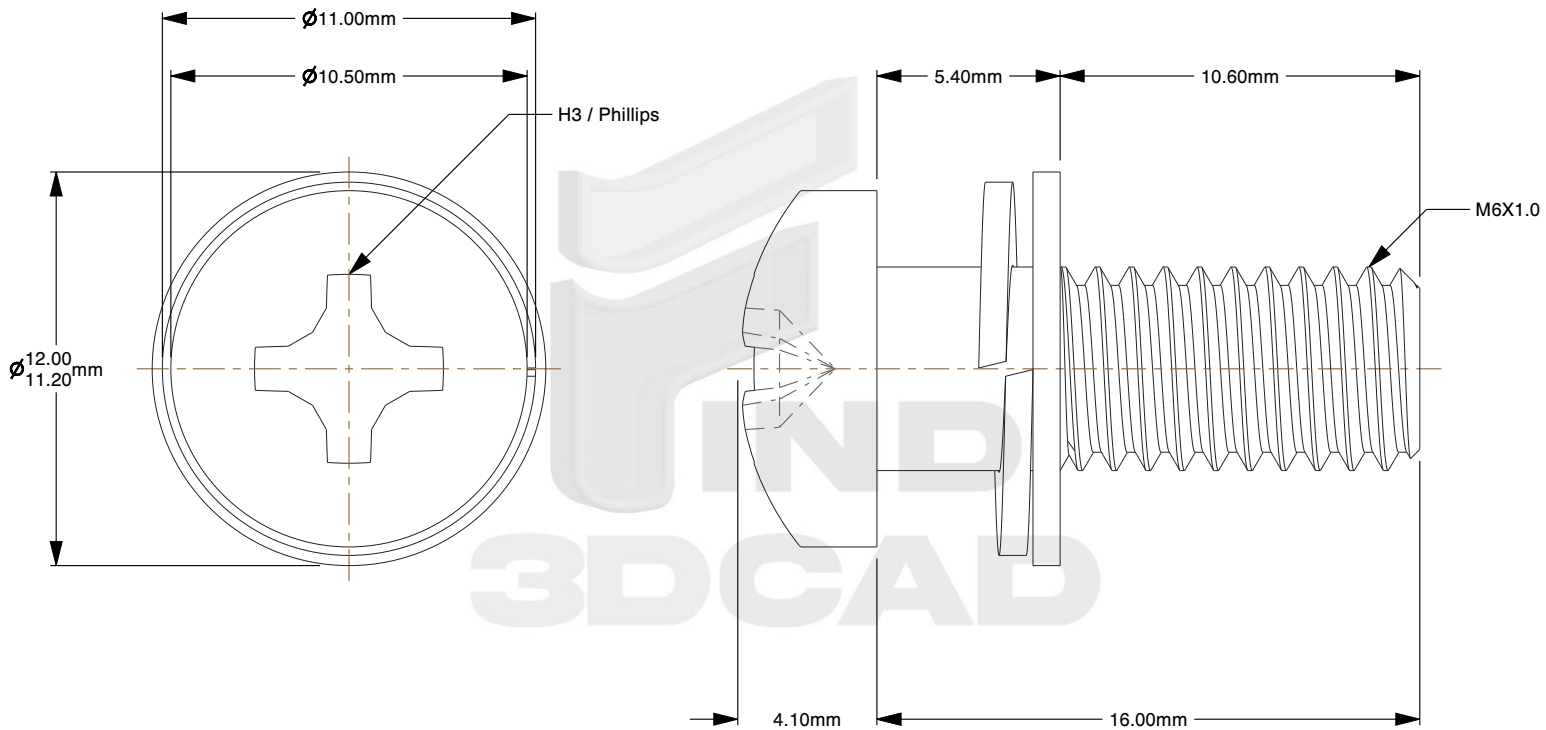

Notes:

1. **Thread Diameter + Pitch:** M6X1.0
2. **Thread Direction:** Right Hand
3. **Type:** SEMS Pan Head Bolt/Screw
4. **Material:** Class 4.8 Steel
5. **Finish:** Yellow Zinc Plated
6. **Drive:** H3 / Phillips
7. **Thread Amount:** Full Thread
8. **Length:** 16mm
9. **Threaded Length:** 10.6mm
10. **Shank Length:** 5.4mm
11. **Flat Washer:** OD: 11.2.12mm; Thickness: 0.8mm
12. **Lock Washer:** OD: 11mm
13. **Head Diameter:** 10.5mm
14. **Head Height:** 4.1mm
15. **Measurement System:** Metric
16. **Specification:** JIS B1188

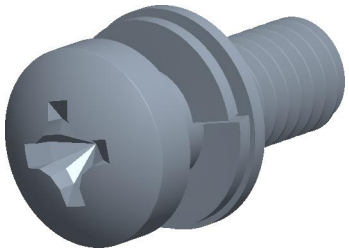

find3dcad	THIRD ANGLE PROJECTION
This file and the related information are provided for reference only and may change without notice. find3dcad does not guarantee the accuracy, completeness, or suitability of this file or the information provided. You are responsible for how you use this file and its information.	This document is the property of find3dcad. The information in it may not be copied, shared, or given to any third party without written permission from find3dcad.
TITLE Pan Head Screw	DESCRIPTION M6X1.0 Pan Phillips SEMS Steel Yellow Zinc Flat + Lock Washer

Sheet Size	PART NUMBER	Rev.	ISSUED
A	MJPPHBS-MSP6X16YLW	01	2026-10-16

SCALE: 4.489	Unless otherwise specified Dimensions are in MILLIMETERS