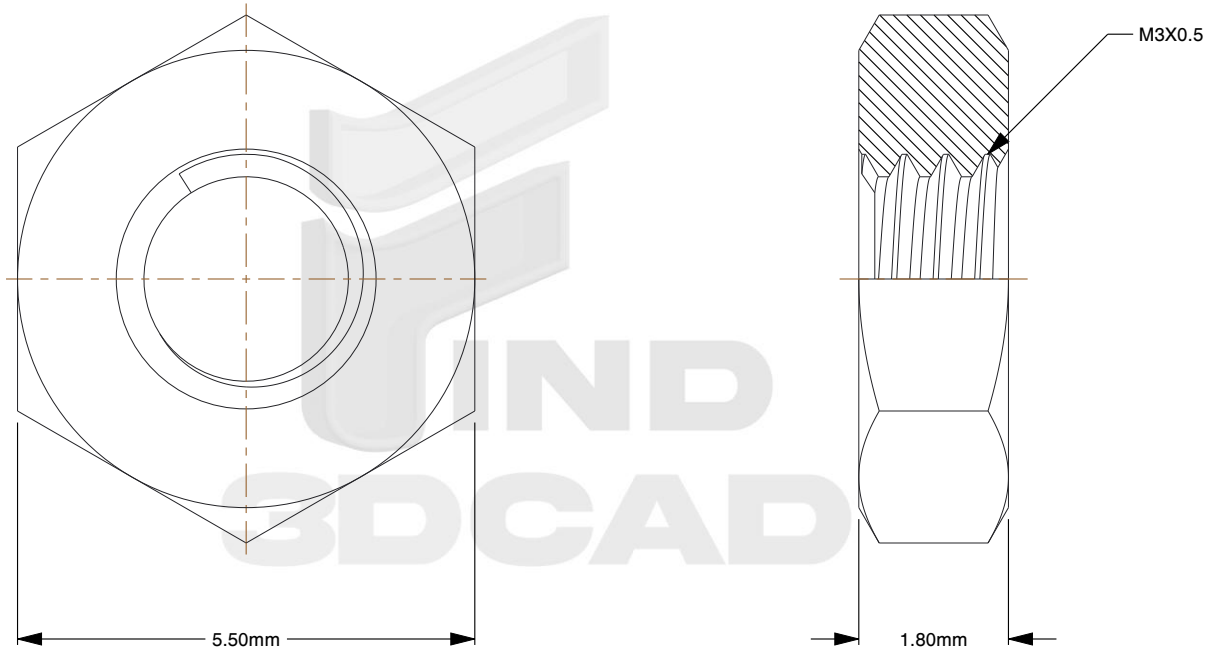

Notes:

1. **Thread Diameter + Pitch:** M3X0.5
2. **Thread Direction:** Right Hand
3. **Type:** Jam Nut
4. **Material:** Brass
5. **Finish:** Plain
6. **Drive:** 5.5mm Wrench
7. **Height:** 1.8mm
8. **Profile:** Thin
9. **Measurement System:** Metric
10. **Specification:** DIN 439

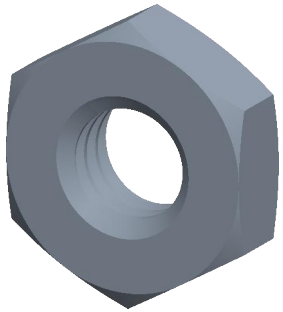

find3dcad

THIRD ANGLE PROJECTION

This file and the related information are provided for reference only and may change without notice. find3dcad does not guarantee the accuracy, completeness, or suitability of this file or the information provided. You are responsible for how you use this file and its information.

This document is the property of find3dcad. The information in it may not be copied, shared, or given to any third party without written permission from find3dcad.

TITLE	DESCRIPTION
Hex Nut	Jam Thin Nut, Coarse Brass DIN 439/936

Sheet Size	PART NUMBER	Rev.	ISSUED
A	MDCJTN3BRS	01	2026-10-16

SCALE: 10.999	Unless otherwise specified Dimensions are in MILLIMETERS