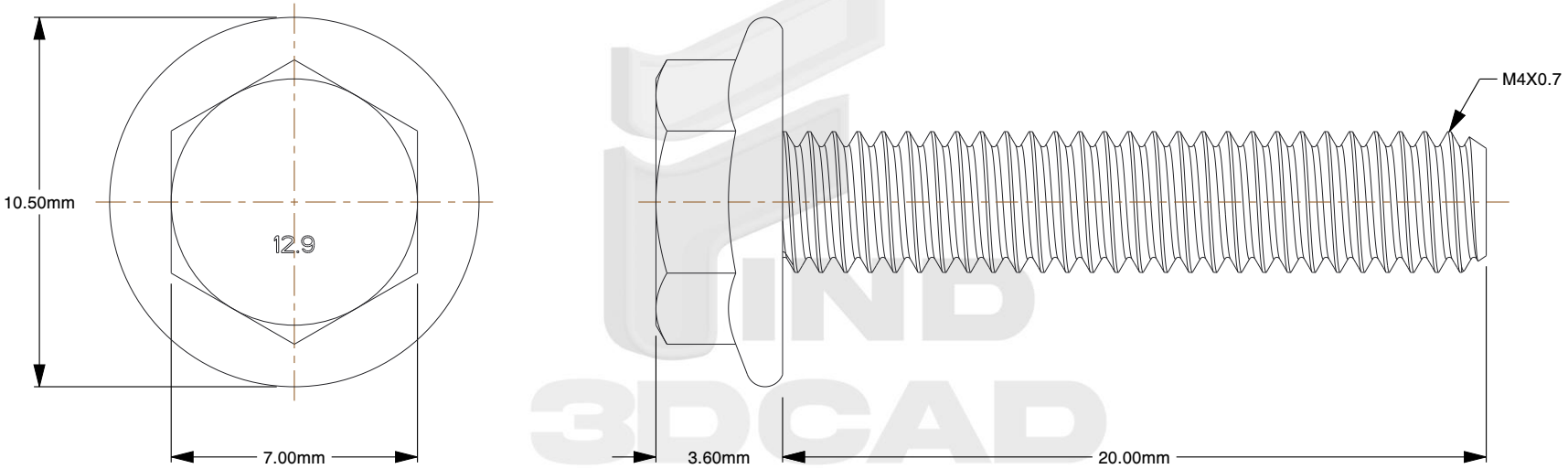

Notes:

1. **Specification:** DIN 6921
2. **Thread Diameter + Pitch:** M4X0.7
3. **Length:** 20mm
4. **Thread Amount:** Full Thread
5. **Threaded Length:** 20mm
6. **Unthreaded Length:** 0mm
7. **Material:** Stainless Steel
8. **Finish:** Plain
9. **Flange Type:** Smooth
10. **Flange Width:** 10.5mm
11. **Head Height:** 3.6mm
12. **Drive:** 7mm Wrench
13. **Type Screw/Bolt:** Hex Flange Head
14. **Thread Direction:** Right Hand
15. **Measurement System:** Metric

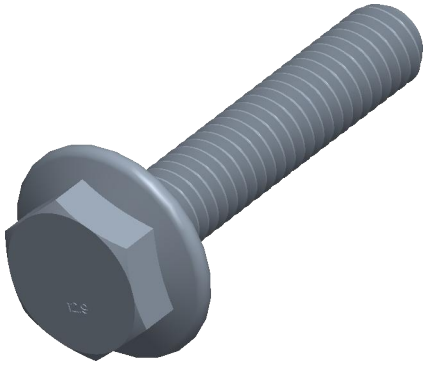

find3dcad			THIRD ANGLE PROJECTION	
This file and the related information are provided for reference only and may change without notice. find3dcad does not guarantee the accuracy, completeness, or suitability of this file or the information provided. You are responsible for how you use this file and its information.			This document is the property of find3dcad. The information in it may not be copied, shared, or given to any third party without written permission from find3dcad.	
TITLE Hex Flange Bolts			PART NUMBER MDHFB4X20SS	
PART NUMBER MDHFB4X20SS	DESCRIPTION M4X0.7 Flange Bolt A2 Stainless Steel DIN 6921 / 7mm Wrench			
Sheet Size	Design Code	Drawing No.	Rev.	ISSUED
A	001	10001	01	2026-10-20
SCALE: 5.091		Unless otherwise specified Dimensions are in INCHES		