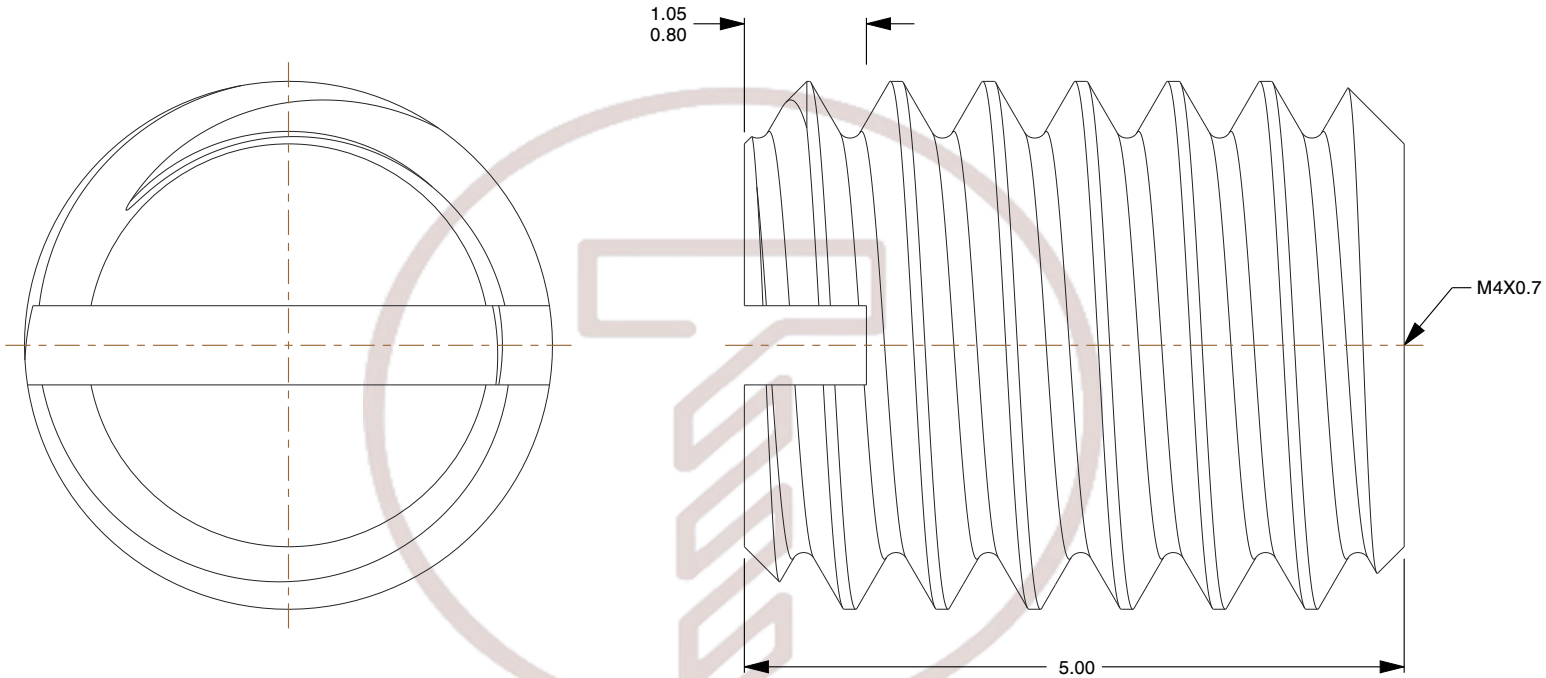

Notes:

1. **Specification:** DIN 551 / ISO 4766
2. **Thread Diameter + Pitch:** M4X0.7
3. **Overall Length:** 5mm
4. **Material:** Brass
5. **Finish:** Plain
6. **Drive:** Slotted
7. **Type Studs/Rods:** Set Screw
8. **Thread Direction:** Right Hand
9. **Measurement System:** Metric

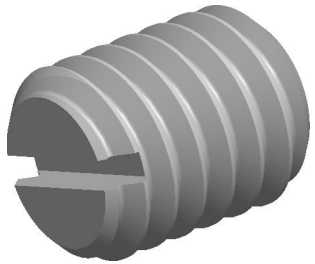

find3dcad

THIRD ANGLE PROJECTION

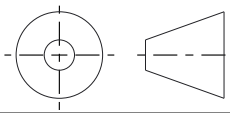

This file and the related information are provided for reference only and may change without notice. TOREC Screws does not guarantee the accuracy, completeness, or suitability of this file or the information provided. You are responsible for how you use this file and its information.

This document is the property of TOREC Screws. The information in it may not be copied, shared, or given to any third party without written permission from TOREC Screws.

DESCRIPTION

M4X0.7 Flat Point Grub Screw
DIN 551 / ISO 4766 Flat Point
Slotted Drive, Brass

TITLE

Set Screws

Sheet Size	PART NUMBER	Rev.	ISSUED
A	MIFPSSS4X5SLFLATBRS	01	2026-10-16

SCALE: 17.458

Unless otherwise specified Dimensions are in MILLIMETERS